Pick Plans
Planning a Lift

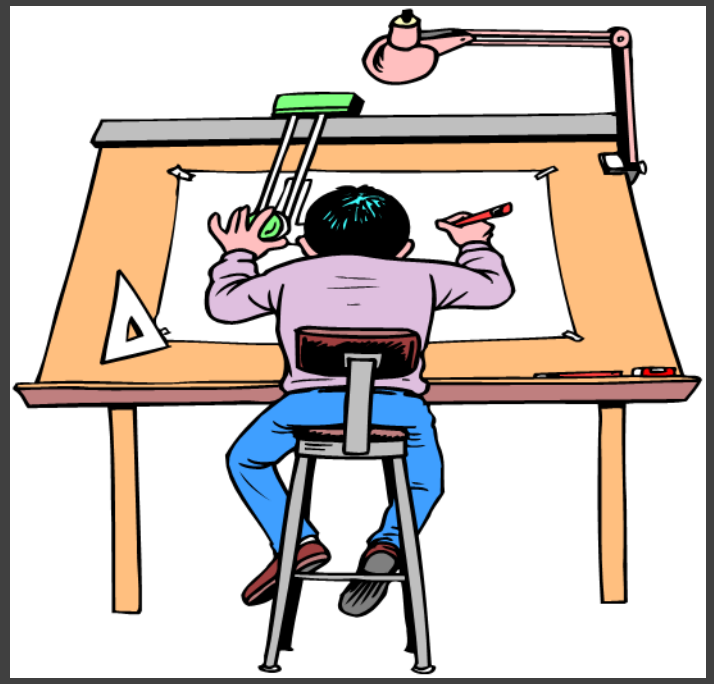

Presented by: Doug Swenson
Director of Safety & Field Training

Pick Plans 101.2

Standard Lift

- Standard Lift 80%
  - Rubber Tired
  - Rough Terrain
  - Hydro
  - Crane on Outriggers

- Standard Lift 95%
  - Crawler Crane Tracks Extended
  - No Jib

Critical Lift

- Critical Lift greater than 80%
    - Rubber Tired
    - Rough Terrain
    - Hydro
    - Crane on Outriggers
- Especially Hazardous Area
- Load or Boom passing over occupied structure

- Critical Lift greater than 95%
    - Crawler Crane Tracks Extended
    - Using a Jib greater than 80%
- Weight greater than 40,000 lbs
- Pick and carry above 75%

Engineered Lift

- Engineered Lift greater than 90%
  - Rubber Tired
  - Rough Terrain
  - Hydro
  - Crane on Outriggers
- Especially critical component
- Two or more cranes will be utilized simultaneously to lift a single load
- A non-standard configuration of the crane is being utilized which is not covered by the crane's standard rating chart

- Engineered Lift greater than 97%
  - Crawler Crane Tracks Extended
  - Using a Jib greater than 90%
- Weight greater than 60,000 lbs
- Especially critical component
- Two or more cranes will be utilized simultaneously to lift a single load
- A non-standard configuration of the crane is being utilized which is not covered by the crane's standard rating chart

Elevation View Drawing

- Critical Lift Plan -

Scale drawing showing the crane, load, and any nearby structures which could cause interference problems with any part of the crane or load.

Including:

- Crane manufacturer(s), model(s), and counterweight(s), if variable
- Boom length(s) and lifting radius
- Maximum load elevation during lifting procedure
- Any jibs or special lifting devices required
- Minimum number of parts of crane hoist line required to lift the load
- All required slings, shackles, and other rigging components identified by capacity, size, length, and location

LANDMARK
ENGINEERING SERVICES, LTD

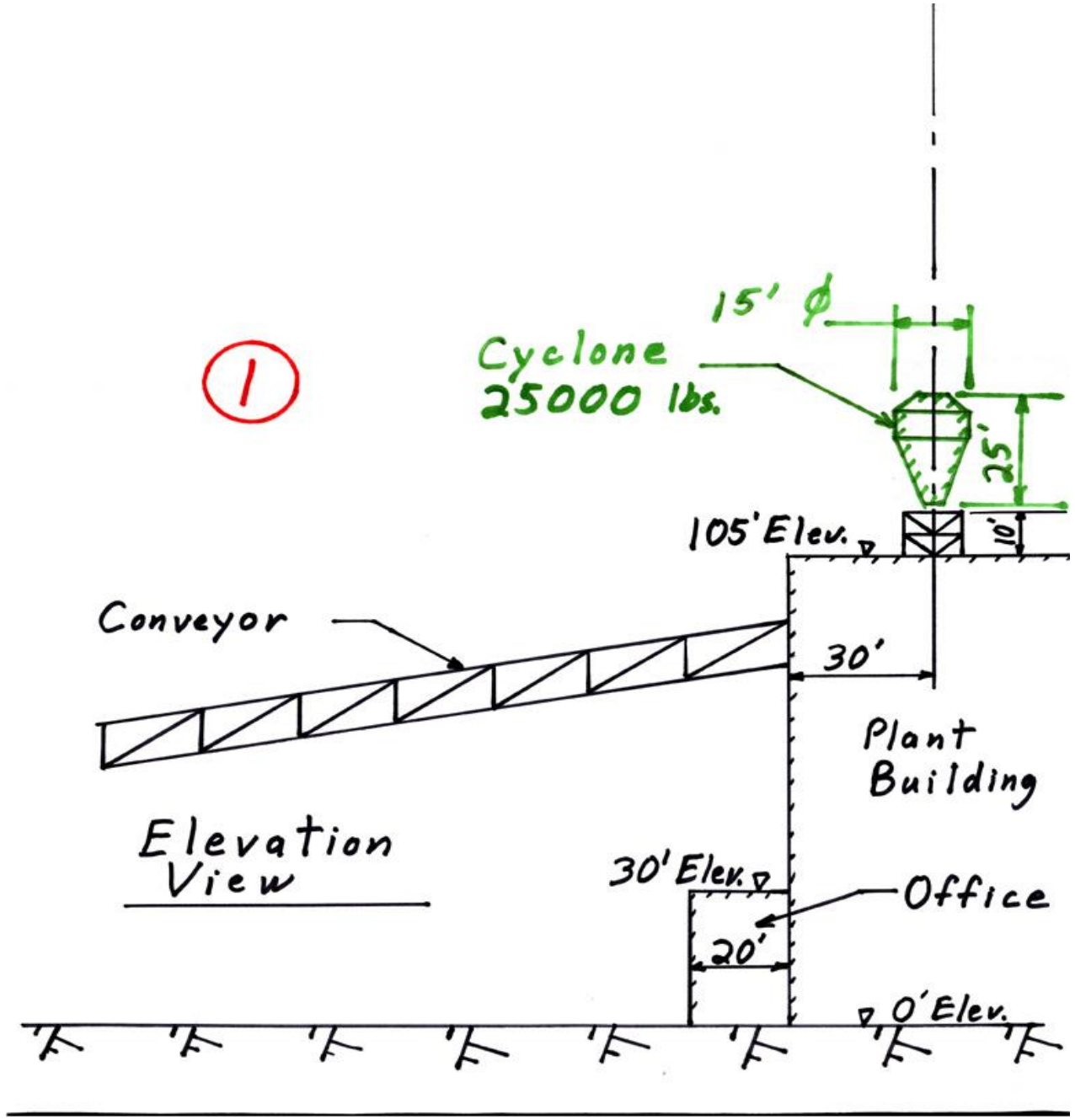
1
15' ϕ
Cyclone
25000 lbs.
25'
10'
105' Elev.
Conveyor
30'
Plant
Building
Elevation
View
30' Elev.
Office
20'
0' Elev.

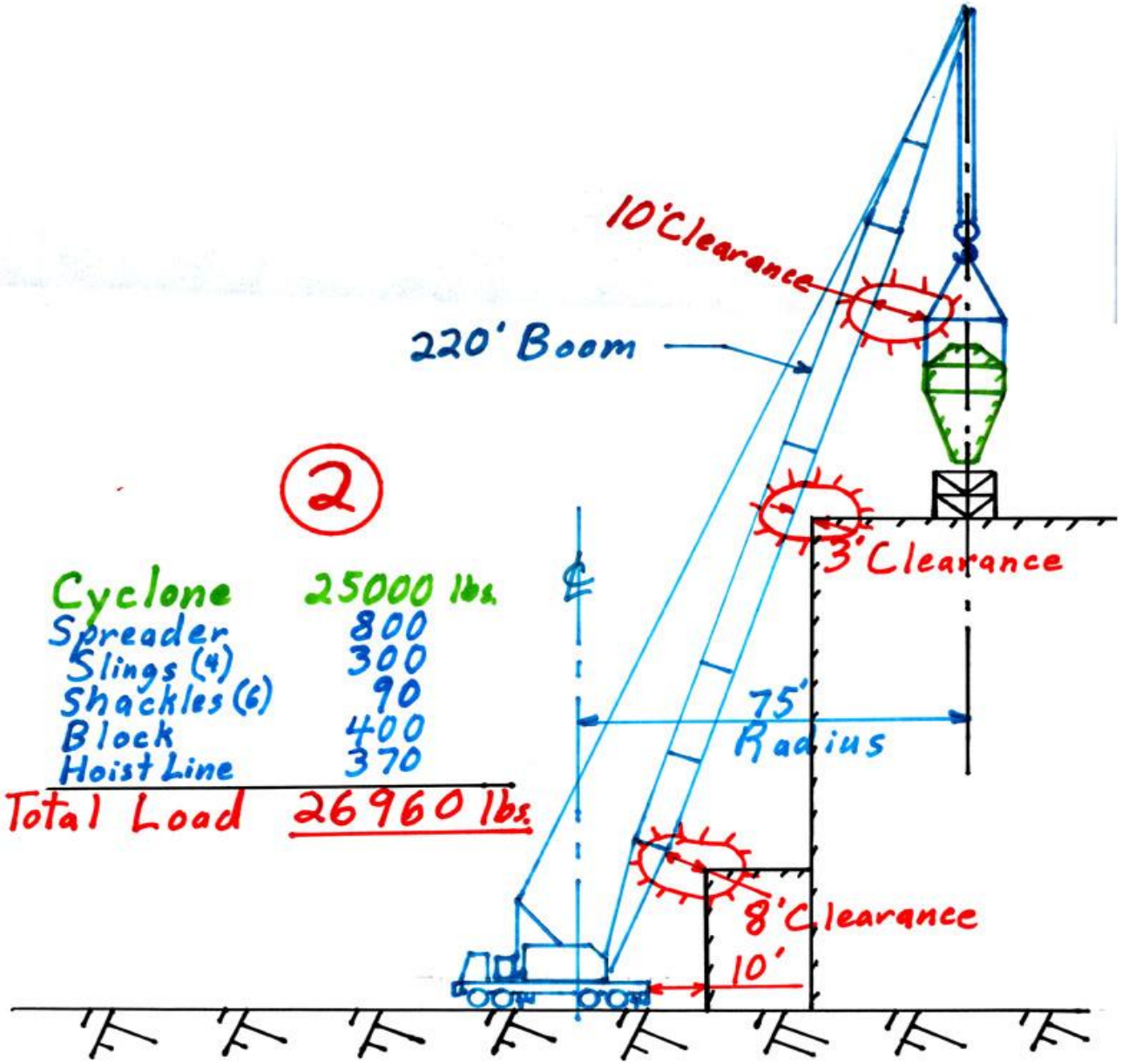

Cyclone	25000 lbs.
Spreader	800
Slings (4)	300
Shackles (6)	90
Block	400
Hoist Line	370
Total Load	26960 lbs.

LANDMARK
ENGINEERING SERVICES, LTD

American Crane Corporation
Wilmington, North Carolina

MODEL 8460 TRUCK CRANE RATINGS IN POUNDS
77L TAPERED TIP BOOM
68,500 LB. EXTENDED CTWT. W/18,000 LB. BUMPER CTWT.
AMERICAN CARRIER

BOOM LENGTH (FEET)	RADIUS (FEET)	BOOM ANGLE (DEGREES)	OUTRIGGERS SET OVER SIDE (POUNDS)	OUTRIGGERS SET OVER REAR (POUNDS)	FROM BOOM POINT TO GROUND (FEET)
210' BOOM	130	53.3	15,890	21,580	176
	140	49.8	13,900	19,130	168
	150	46.1	12,200	17,050	159
	160	42.2	10,730	15,240	148
	170	38.0	9,440	13,660	136
	180	33.3	8,310	12,280	123
	190	27.9	7,310	11,040	106
	200	21.4	6,420	9,950	84
	210	11.9	5,620	8,970	50
220' BOOM	39	81.0	75,450 *	75,450 *	225
	40	80.7	75,450 *	75,450 *	224
	50	78.1	65,140 *	74,780 *	222
	60	75.4	51,030 *	66,370	220
	70	72.7	41,050 *	53,170	217
	80	69.9	33,730	43,830	214
	90	67.1	28,510	37,270	210
	100	64.3	24,160	31,880	205
	110	61.3	20,700	27,600	200
	120	58.3	17,870	24,110	194
	130	55.2	15,520	21,220	188
	140	52.0	13,530	18,770	181
	150	48.6	11,820	16,670	172
	160	45.0	10,350	14,860	163
	170	41.2	9,060	13,280	152
	180	37.1	7,920	11,890	140
	190	32.5	6,920	10,660	126
	200	27.3	6,020	9,560	108
	210	20.9	5,220	8,580	86
	220	11.6	4,520	7,710	51
230' BOOM	41	80.9	59,450 *	59,450 *	234
	50	78.6	57,720 *	57,720 *	233
	60	76.0	50,630 *	56,470 *	230
	70	73.4	40,780 *	52,970	228
	80	70.8	33,540	43,640	224
	90	68.2	28,350	37,100	221
	100	65.5	24,000	31,720	216
	110	62.7	20,540	27,440	212
	120	59.9	17,710	23,950	206
	130	56.9	15,360	21,050	200

The ratings in this chart are for planning purposes only. For safe operation use only those ratings specifically designed to a crane and mounted in the Operator's Cab in the Operator's Manual.

LANDMARK
ENGINEERING SERVICES, LTD

Plan View Drawing

- Critical Lift Plan -

Scale drawing showing the crane, load, and any nearby structures which could cause interference problems with any part of the crane or load.

Including:

- Route that transport will take to position the load for lifting
- Initial lifting position of the load including radius
- Final placement position of the load including radius
- Location of the crane(s) including tailswing limits
- Route that crane(s) will take if walking with the load, as well as associated matting requirements

LANDMARK
ENGINEERING SERVICES, LTD

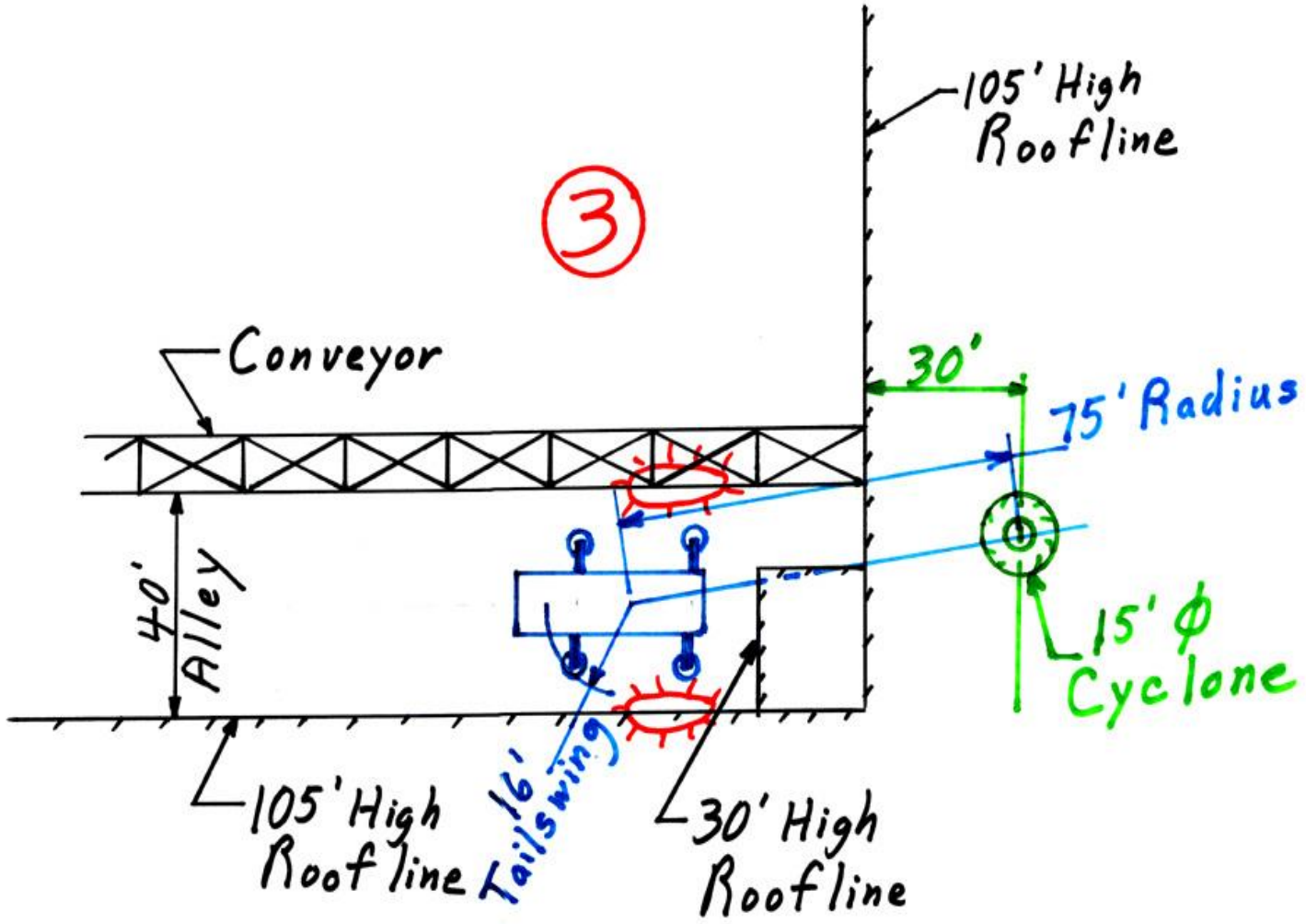

Plan View

LANDMARK ENGINEERING SERVICES, LTD.

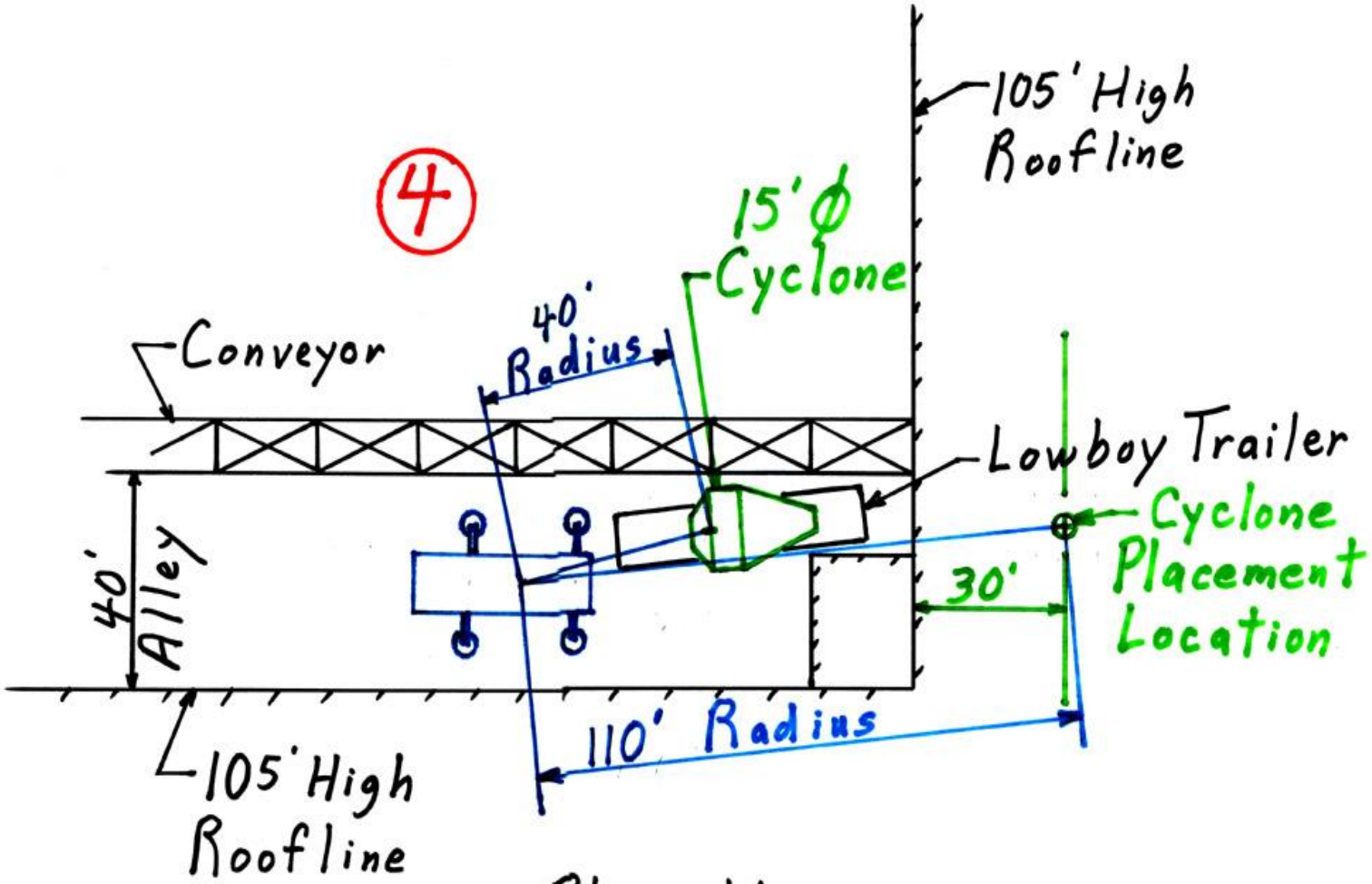

Plan View

LANDMARK ENGINEERING SERVICES, LTD

American Crane Corporation
Wilmington, North Carolina

MODEL 8460 TRUCK CRANE RATINGS IN POUNDS
77L TAPERED TIP BOOM
68,500 LB. EXTENDED CTWT. W/18,000 LB. BUMPER CTWT.
AMERICAN CARRIER

BOOM LENGTH (FEET)	RADIUS (FEET)	BOOM ANGLE (DEGREES)	OUTRIGGERS SET OVER SIDE (POUNDS)	OUTRIGGERS SET OVER REAR (POUNDS)	FROM BOOM POINT TO GROUND (FEET)
210' BOOM	130	53.3	15,890	21,580	176
	140	49.8	13,900	19,130	168
	150	46.1	12,200	17,050	159
	160	42.2	10,730	15,240	148
	170	38.0	9,440	13,660	136
	180	33.3	8,310	12,280	123
	190	27.9	7,310	11,040	106
	200	21.4	6,420	9,950	84
	210	11.9	5,620	8,970	50
220' BOOM	39	81.0	75,450 *	75,450 *	225
	40	80.7	75,450 *	75,450 *	224
	50	78.1	65,140 *	74,780 *	222
	60	75.4	51,030 *	66,370	220
	70	72.7	41,050 *	53,170	217
	80	69.9	33,730	43,830	214
	90	67.1	28,510	37,270	210
	100	64.3	24,160	31,880	205
	110	61.3	20,700	27,600	200
	120	58.3	17,870	24,110	194
	130	55.2	15,520	21,220	188
	140	52.0	13,530	18,770	181
	150	48.6	11,820	16,670	172
	160	45.0	10,350	14,860	163
	170	41.2	9,060	13,280	152
	180	37.1	7,920	11,890	140
	190	32.5	6,920	10,660	126
	200	27.3	6,020	9,560	108
	210	20.9	5,220	8,580	86
	220	11.6	4,520	7,710	51
230' BOOM	41	80.9	59,450 *	59,450 *	234
	50	78.6	57,720 *	57,720 *	233
	60	76.0	50,630 *	56,470 *	230
	70	73.4	40,780 *	52,970	228
	80	70.8	33,540	43,640	224
	90	68.2	28,350	37,100	221
	100	65.5	24,000	31,720	216
	110	62.7	20,540	27,440	212
	120	59.9	17,710	23,950	206
	130	56.9	15,360	21,050	200

The ratings in this chart are for planning purposes only. For actual use only those ratings specifically assigned to a crane mounted in the Operator's Cab or the Operator's Manual.

LANDMARK
ENGINEERING SERVICES, LTD

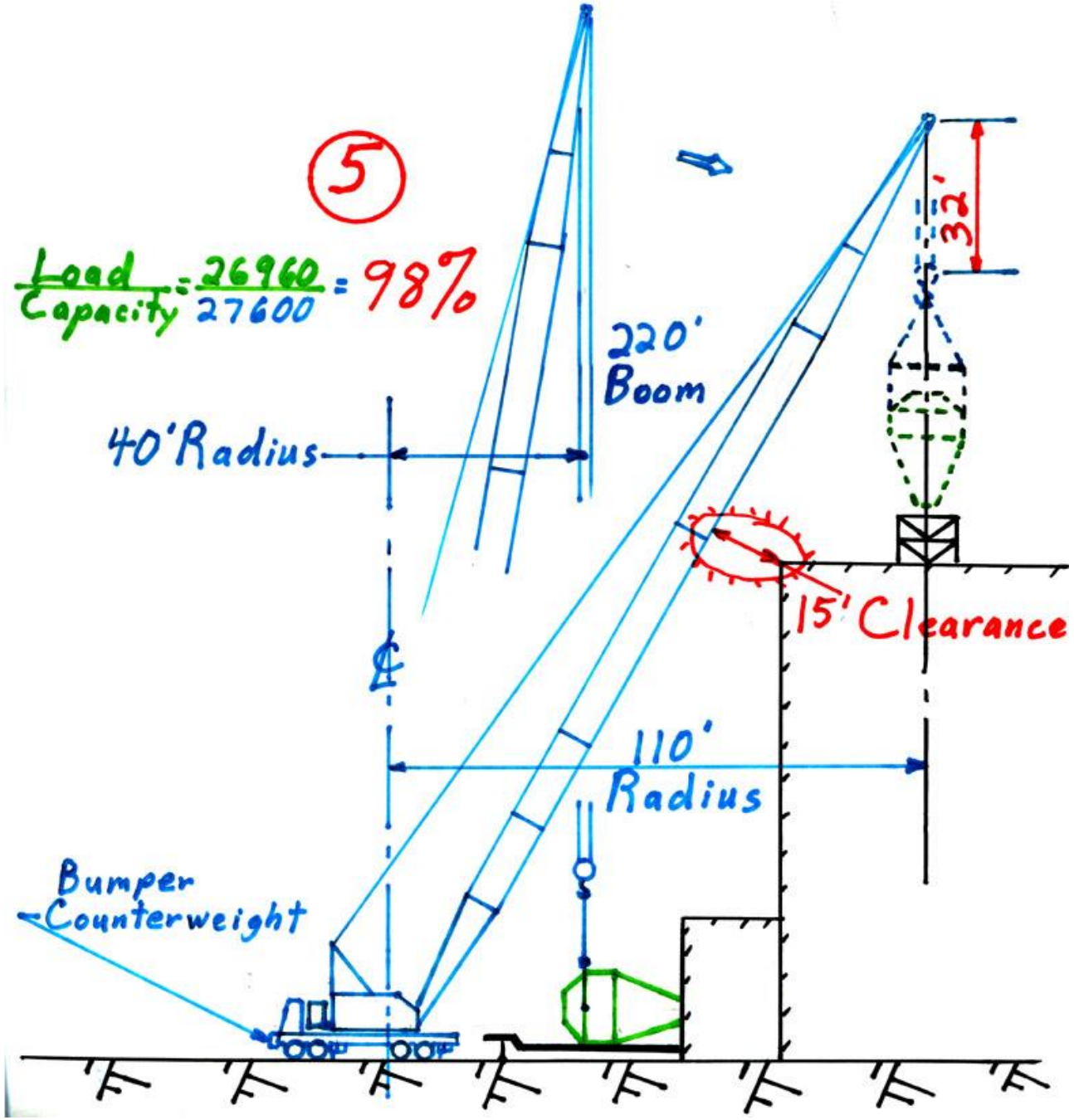

LANDMARK
ENGINEERING SERVICES, LTD

American Crane Corporation
Wilmington, North Carolina

MODEL 8460 TRUCK CRANE RATINGS IN POUNDS
TTL TAPERED TIP BOOM
68,500 LB. EXTENDED CTWT. W/18,000 LB. BUMPER CTWT.
AMERICAN CARRIER

BOOM LENGTH (FEET)	RADIUS (FEET)	BOOM ANGLE (DEGREES)	OUTRIGGERS SET OVER SIDE (POUNDS)	OUTRIGGERS SET OVER REAR (POUNDS)	FROM BOOM POINT TO GROUND (FEET)
210' BOOM	130	53.3	15,890	21,580	176
	140	49.8	13,900	19,130	168
	150	46.1	12,200	17,050	159
	160	42.2	10,730	15,240	148
	170	38.0	9,440	13,660	136
	180	33.3	8,310	12,280	123
	190	27.9	7,310	11,040	106
	200	21.4	6,420	9,950	84
	210	11.9	5,620	8,970	50
220' BOOM	39	81.0	75,450 *	75,450 *	225
	40	80.7	75,450 *	75,450 *	224
	50	78.1	65,140 *	74,780 *	222
	60	75.4	51,030 *	66,370	220
	70	72.7	41,050 *	53,170	217
	80	69.9	33,730	43,830	214
	90	67.1	28,510	37,270	210
	100	64.3	24,160	31,880	205
	110	61.3	20,700	27,600	200
	120	58.3	17,870	24,110	194
	130	55.2	15,520	21,220	188
	140	52.0	13,530	18,770	181
	150	48.6	11,820	16,670	172
	160	45.0	10,350	14,860	163
	170	41.2	9,060	13,280	152
	180	37.1	7,920	11,890	140
	190	32.5	6,920	10,660	126
	200	27.3	6,020	9,560	108
	210	20.9	5,220	8,580	86
	220	11.6	4,520	7,710	51
230' BOOM	41	80.9	59,450 *	59,450 *	234
	50	78.6	57,720 *	57,720 *	233
	60	76.0	50,630 *	56,470 *	230
	70	73.4	40,780 *	52,970	228
	80	70.8	33,540	43,640	224
	90	68.2	28,350	37,100	221
	100	65.5	24,000	31,720	216
	110	62.7	20,540	27,440	212
	120	59.9	17,710	23,950	206
	130	56.9	15,360	21,050	200

The ratings in this chart are for planning purposes only. For safe operation use only those ratings specifically designed for a crane and mounted in the Operator's Cab or in the Operator's Manual.

LANDMARK
ENGINEERING SERVICES, LTD

LIFT EVALUATION FORM - LIFT PERMIT

This form must be completed and signed for any lift exceeding 75% of the crane's rated capacity.

Client/Project Name_____ Date of Lift_____
Location_____

LOAD DESCRIPTION_____

Load Weight _____
Block Wt. _____
Spreader Wt. _____
Rigging Wt. _____
Jib Wt. _____
Jib Ball Wt. _____
Hoist Line Wt. _____

TOTAL LOAD _____

Load Weight

How determined_____

By Whom_____

CRANE MANUFACTURER_____ Model No._____
Serial No._____
Counterweight_____ Boom Length_____ Jib Length_____
Max. Load Radius_____
Boom Angle _____
Parts of Line _____

Lift Will Be On - Boom_____Jib_____
Lift Will Be - Over The Side_____Over The End_____
On Outriggers_____On Tires____On Crawlers_____

CRANE RATED CAPACITY_____(from rating chart)

Percentage of Capacity* = $\frac{\text{TOTAL LOAD}}{\text{RATED CAP.}} \times 100 =$ _____

*If Percentage of Capacity exceeds 90%, lift plan drawings must be included.

Soil Condition_____
Will Cribbing or Crane Mats Be Used? Yes_____No_____
Are There Underground Hazards? Yes_____No_____
Are There Fire or Explosive Hazards Within Reach? Yes_____No_____
Are There Electrical Hazards Within Reach? Yes_____No_____

I am aware of no safety issue which would prevent this lift from being performed.
Prepared By _____ Date _____
Operator _____ Lift Director _____
Craft Supervisor_____

LANDMARK
ENGINEERING SERVICES, LTD

HSP-8060 Lifting Capacities

35'-110' *(10.67-33.53 m)* 4-section boom

Structurally Limited Capacities

Stability Limited Capacities

Capacities On Outriggers① **Manual Section Retracted**															77' *(23.47 m)* boom plus 33' *(10.06 m)* fly			85' *(25.91 m)* boom plus 33' *(10.06 m)* fly		
Load radius	35' *(10.67 m)*		40' *(12.19 m)*		48' *(14.63 m)*		56' *(17.07 m)*		62' *(18.[illegible] m)*		72' *(21.95 m)*		85' *(25.91 m)*		Boom angle	Front	360°	Boom angle	Front	360°
	Front	360°	Front	360°	Front	360°	Front	360°	Front	360°	Front	360°	Front	360°						
10' 3.05 m	120,000 54431	120,000 54431	90,600 41096	90,600 41096	87,100 39509	87,100 39509	86,100 39055	86,100 39055							See Note ②			See Note ②		
12' 3.66 m	98,300 44589	98,300 44589	90,600 41096	90,600 41096	87,100 39509	87,100 39509	80,000 36288	80,000 36288	67,700 30709	67,700 30709										
15' 4.57 m	84,000 38102	84,000 38102	82,400 37777	82,400 37777	79,500 36061	79,500 36061	69,800 31661	69,800 31661	59,400 26944	59,400 26944	51,800 23496	[illegible] 23[illegible]								
20' 6.10 m	65,000 29484	65,000 29484	65,000 29484	65,000 29484	63,400 28758	63,400 28758	57,200 25946	57,200 25946	49,000 22226	49,000 22226	43,200 19596	43,20[illegible] 19596	36,600 16602	36,600 16602						
25' 7.62 m	50,200 22771	50,200 22771	50,200 22771	50,200 22771	50,200 22771	50,200 22771	48,100 21818	48,100 21818	41,300 18734	41,300 18734	36,800 16692	36,800 16692	[illegible],500 13[illegible]35	30,500 13835	76°	22,200 10070	22,200 10070	77°	18,500 8392	18,500 8392
30' 9.14 m			40,400 18325	40,400 18325	40,400 18325	40,400 18325	40,400 18325	40,400 18325	35,500 16103	35,500 16103	31,800 14424	31,800 14424	25,80[illegible] 11703	25,800 11703	74°	22,200 10070	22,200 10070	75°	17,500 7938	17,500 7938
35' 10.67 m					33,300 15105	31,900 14470	33,300 15105	31,900 14470	31,100 14107	31,100 14107	27,800 12602	27,800 12602	22,300 10115	22,300 10115	71°	20,200 10070	20,000 10070	72°	15,500 7031	15,500 7031
40' 12.19 m					26,600 12066	25,000 11340	26,600 12066	25,000 11340	26,600 12066	25,000 11340	24,500 11113	24,500 11113	19,400 8800	19,400 8800	68°	18,900 8573	18,900 8573	70°	13,900 6305	13,900 6305
45' 13.72 m							21,500 9752	20,100 9117	21,500 9752	20,100 9117	21,500 9752	20,100 9117	17,100 7757	17,100 7757	66°	17,300 7847	17,300 7847	67°	12,400 5625	12,400 5625
50' 15.24 m							17,500 7938	16,400 7439	17,500 7938	16,400 7439	17,500 7938	16,400 7439	15,400 6985	15,400 6985	63°	15,400 6985	15,400 6985	64°	10,900 4944	10,900 4944
55' 16.76 m									14,700 6668	13,700 6214	14,700 6668	13,700 6214	13,800 6260	13,700 6260	60°	14,300 6486	14,300 6486	62°	9,600 4355	9,600 4355
60' 18.29 m											12,400 5625	11,500 5216	12,400 5625	11,500 5216	57°	13,200 5988	13,200 5988	59°	8,600 3901	8,600 3901
65' 19.81 m											10,400 4717	9,700 4400	10,400 4[illegible]	9,700 4400	53°	12,300 5579	11,800 5352	56°	7,700 3493	7,700 3493
70' 21.34 m													8,900 4037	8,200 3720	50°	11,000 4990	10,300 4672	53°	6,900 3130	6,900 3130
80' 24.38 m													6,400 2903	5,800 2631	42°	8,500 3856	7,900 3583	46°	5,600 2540	5,600 2540
90' 27.43 m															33°	6,600 2994	6,100 2767	39°	4,600 2087	4,600 2087
100' 30.48 m															21°	5,100 2313	4,700 2132	30°	3,900 1769	3,900 1769
110' 33.53 m																		17°	3,400 1542	3,400 1542

Structurally Limited Capacities

Stability Limited Capacities

Boom Lgth.: Feet	Oper. Rad.: Feet	Boom Ang.: Deg.	Boom Point: Elev.	Capacity: Crawlers Extended
70	16.5	79.7	75.9	460,000
	17	79.3	75.8	400,000
	18	78.5	75.6	380,100
	19	77.6	75.4	363,000
	20	76.8	75.1	347,300
	22	75.1	74.6	319,600
	24	73.4	74.1	293,400
	26	71.7	73.5	266,100
	28	69.9	72.8	237,500
	30	68.2	72.0	214,300
	32	66.4	71.2	195,100
	34	64.6	70.2	178,900
	36	62.8	69.3	165,200
	38	60.9	68.2	153,300
	40	59.1	67.0	143,000
	45	54.1	63.7	122,100
	50	48.9	59.8	106,300
	55	43.2	54.9	93,900
	60	36.9	49.0	84,000
	65	29.4	41.3	75,800
	70	19.5	30.3	63,900

Boom Lgth.: Feet	Oper. Rad.: Feet	Boom Ang.: Deg.	Boom Point: Elev.	Capacity: Crawlers Extended
80	17	80.6	85.9	392,800
	18	79.9	85.8	378,900
	19	79.2	85.6	361,800
	20	78.5	85.4	346,100
	22	77.0	84.9	318,400
	24	75.5	84.5	292,500
	26	74.0	83.9	265,600
	28	72.5	83.3	237,000
	30	71.0	82.7	213,800
	32	69.5	81.9	194,600
	34	68.0	81.2	178,500
	36	66.4	80.3	164,700
	38	64.8	79.4	152,800
	40	63.3	78.4	142,400
	45	59.2	75.7	121,500
	50	54.9	72.5	105,700
	55	50.4	68.6	93,300
	60	45.6	64.1	83,400
	65	40.3	58.8	75,200
	70	34.4	52.2	68,300
	75	27.4	43.9	62,500
	80	18.2	32.0	53,900

Boom Lgth.: Feet	Oper. Rad.: Feet	Boom Ang.: Deg.	Boom Point: Elev.	Capacity: Crawlers Extended
90	18	81.1	95.9	355,400
	19	80.4	95.7	346,900
	20	79.8	95.6	336,900
	22	78.5	95.2	317,400
	24	77.2	94.7	291,700
	26	75.9	94.3	264,800
	28	74.5	93.7	236,600
	30	73.2	93.2	213,400
	32	71.9	92.5	194,200
	34	70.5	91.9	178,000
	36	69.2	91.1	164,200
	38	67.8	90.3	152,300
	40	66.4	89.5	142,000
	45	62.9	87.1	121,100
	50	59.3	84.4	105,200
	55	55.5	81.2	92,800
	60	51.5	77.5	82,900
	65	47.3	73.2	74,700
	70	42.8	68.2	67,800
	75	37.9	62.3	62,000
	80	32.4	55.2	57,000
	85	25.8	46.2	52,600
	90	17.1	33.5	45,900

Boom Lgth.: Feet	Oper. Rad.: Feet	Boom Ang.: Deg.	Boom Point: Elev.	Capacity: Crawlers Extended
100	19	81.4	105.9	332,900
	20	80.8	105.7	327,100
	22	79.6	105.4	316,200
	24	78.5	105.0	290,800
	26	77.3	104.5	263,900
	28	[illegible]	104.1	236,200
	30	[illegible]	103.6	212,900
	32	73.7	103.0	193,700
	34	72.5	102.4	177,500
	36	71.3	[illegible]	163,700
	38	70.1	[illegible]	151,800
	40	68.9	[illegible]	141,400
	45	65.8	98.2	120,500
	50	62.6	95.8	104,700
	55	59.3	93.0	92,300
	60	55.9	89.8	82,300
	65	52.4	86.2	74,100
	70	48.7	82.1	67,200
	75	44.8	77.4	61,400
	80	40.5	72.0	56,400
	85	35.9	65.6	52,000
	90	30.7	58.0	48,200
	95	24.5	48.5	44,900
	100	16.3	35.0	39,300

WARNING! CHECK AMOUNT OF COUNTERWEIGHT ON MACHINE BEFORE USE OF THIS CHART.

Capacities continued on reverse side.

©MANITOWOC 1984

Form No. [illegible]34-A, 4-26-84/GA

LIFTCRANE CAPACITIES — 4100W SERIES 2 — BOOM NO. 22C — O.T.

Structurally Limited Capacity

LANDMARK ENGINEERING SERVICES, LTD

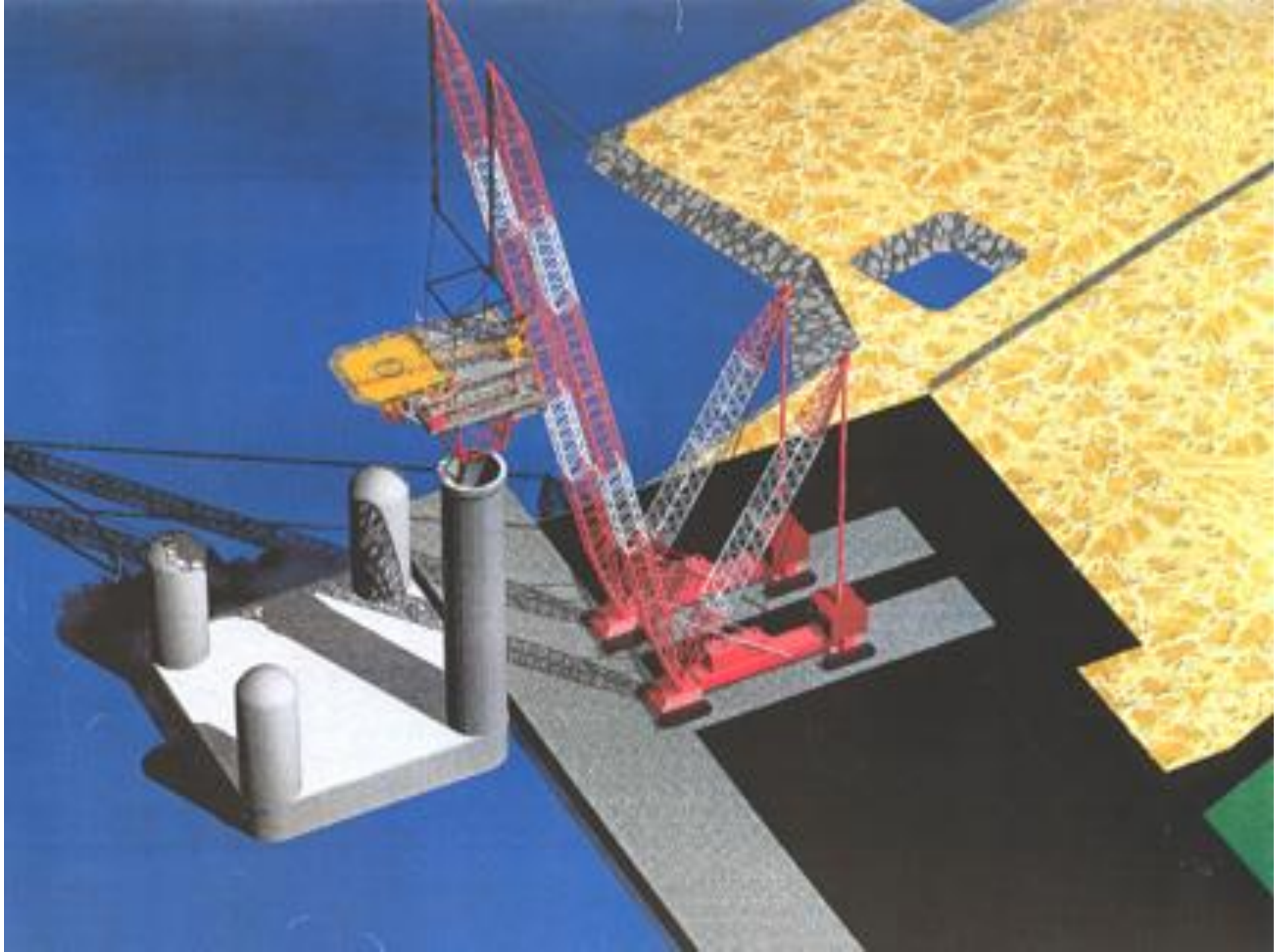

LANDMARK
ENGINEERING SERVICES, LTD

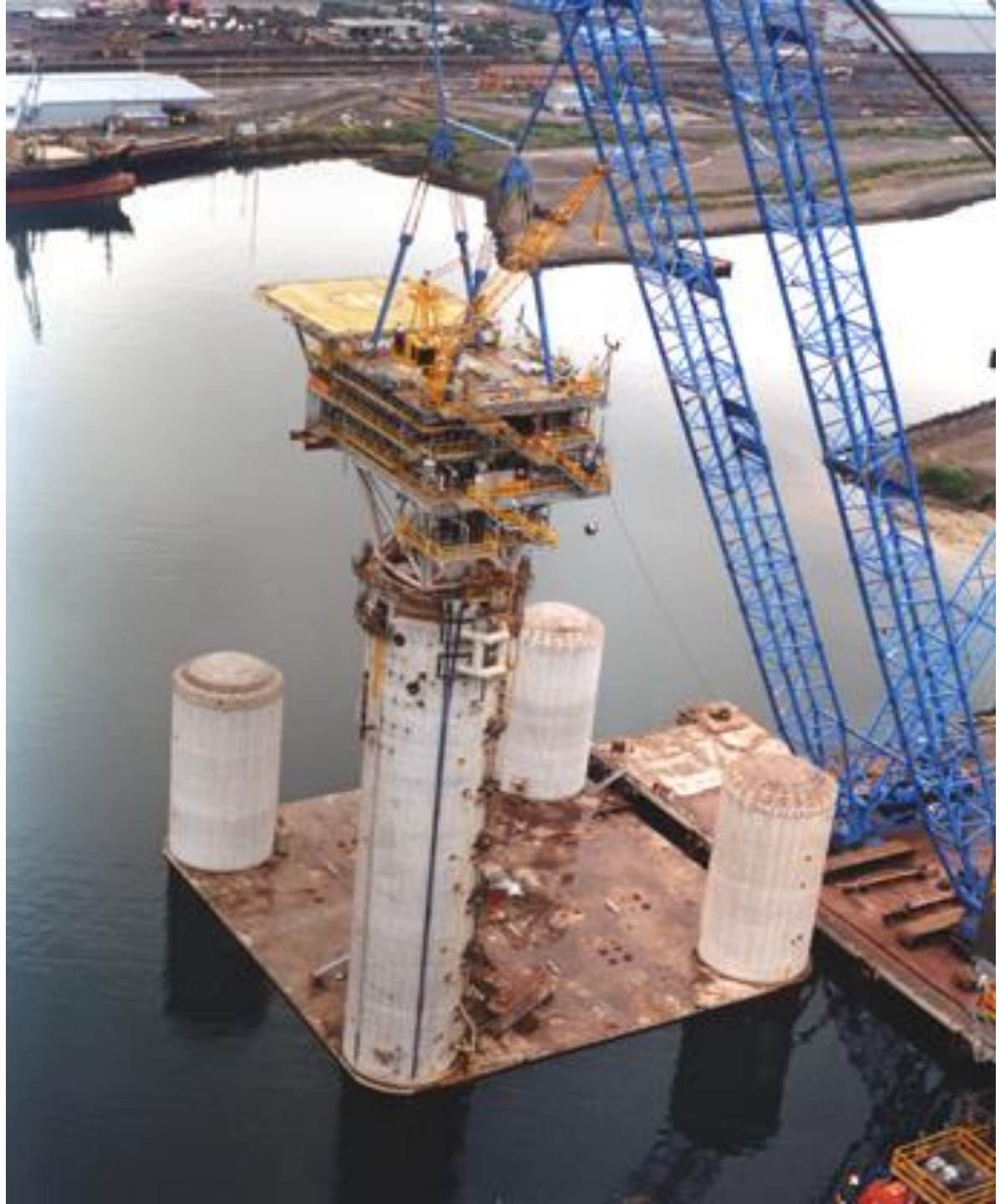

LANDMARK
ENGINEERING SERVICES, LTD.

1926.1432 Multiple-crane/derrick lifts -- supplemental requirements.

- (a) *Plan development. Before beginning a crane/derrick operation in which more than* one crane/derrick will be supporting the load, the operation must be planned.
  - (1) The plan must be developed by a qualified person.
  - (2) The plan must be designed to ensure that the requirements of this subpart are met.
  - (3) Where the qualified person determines that engineering expertise is needed for the planning, the employer must ensure that it is provided.

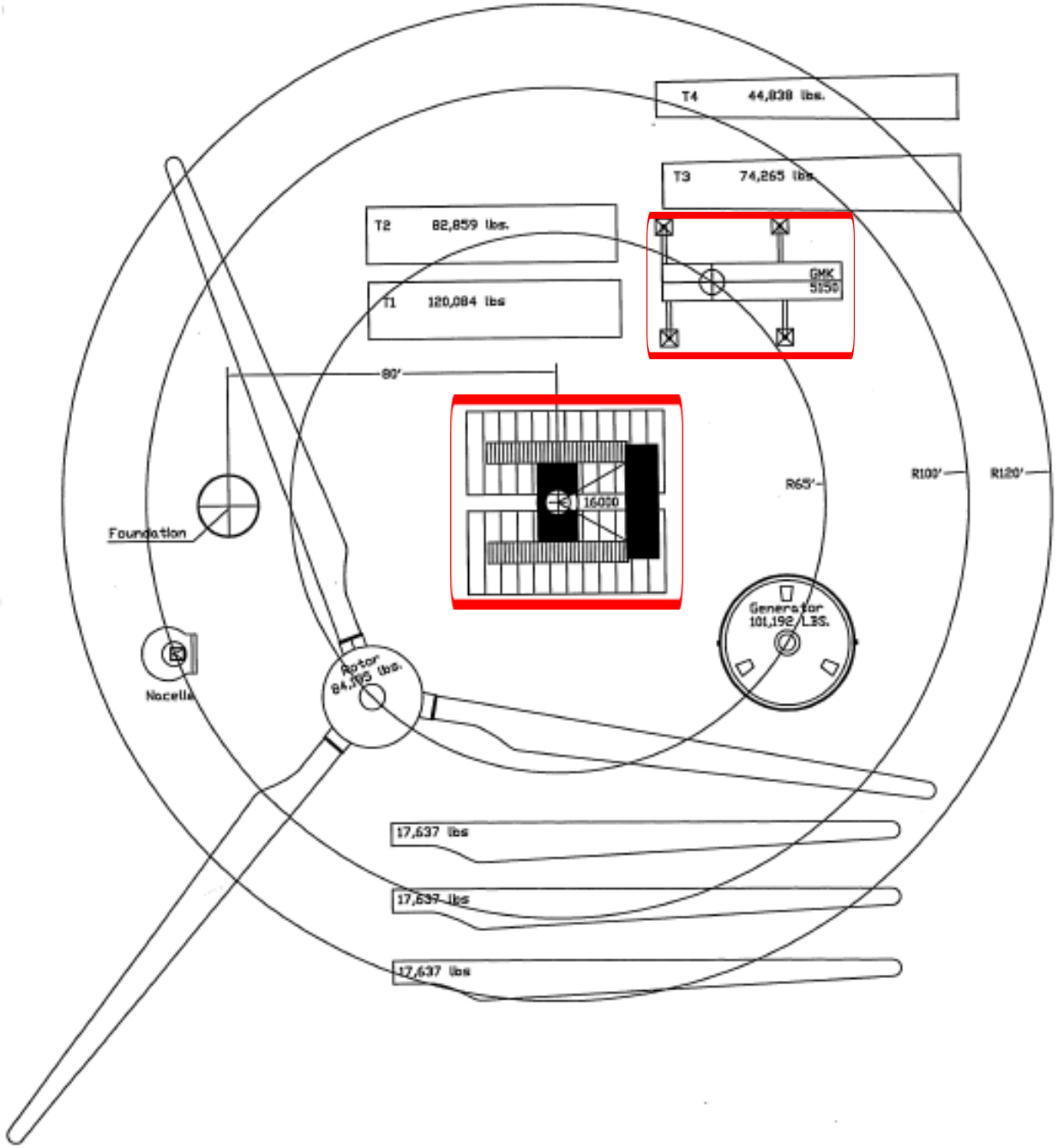
T4 44,838 lbs.
T3 74,265 lbs
T2 82,859 lbs.
T1 120,084 lbs
GMK 5150
80'
16000
R65'
R100'
R120'
Foundation
Nacelle
Rotor 84,395 lbs.
Generator 101,192 LBS.
17,637 lbs
17,637 lbs
17,637 lbs

Engineered pick plan goes from paper to the ground good (communication) work your plan!

CRANE CONFIGURATION:
Grove GMK 5150 C/W 63.6' boom, 59,600 Lbs cwt and 45 Metric Ton capacity load block reeved 8 parts with a maximum lifting capaity of 109,600 lbs using 19 mm dia. wire rope with a minimum breaking strength of 66,600 lbs.

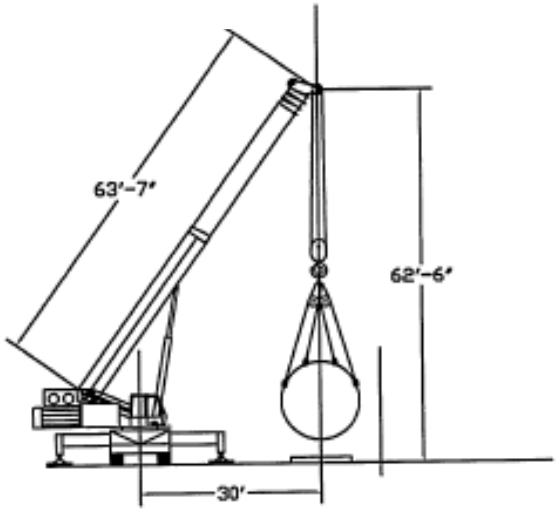

ANALYSIS: Tower Up End Tailing
Grove GMK 5150 c/w 63.6' boom

Capacity at 30' Radius	103,000 lbs
Tower T1 65%	78,055 lbs
Load block	1,500 lbs
Falls (8)	468 lbs
Rigging	300 lbs
Gross load.	80,323 lbs
Excess Cap	22,677 lbs

78% of Cap.

ANALYSIS: Tower Up End Tailing
Grove GMK 5150 c/w 63.6' boom

Capacity at 30' Radius	103,000 lbs
Tower T3 65%	48,273 lbs
Load block	1,500 lbs
Falls (8)	468 lbs
Rigging	300 lbs
Gross load.	50,541 lbs
Excess Cap	52,459 lbs

49% of Cap.

ANALYSIS: Tower Up End Tailing
Grove GMK 5150 c/w 63.6' boom

Capacity at 30' Radius	103,000 lbs
Tower T2 65%	53,859 lbs
Load block	1,500 lbs
Falls (8)	468 lbs
Rigging	300 lbs
Gross load.	56,127 lbs
Excess Cap	46,873 lbs

54.5% of Cap.

ANALYSIS: Tower Up End Tailing
Grove 5150 c/w 63.6' boom

Capacity at 30' Radius	96,000 lbs
Tower T4 Top 65%	29,145 lbs
Load block	1,500 lbs
Falls (8)	468 lbs
Rigging	300 lbs
Gross load.	31,413 lbs
Excess Cap	71,587 lbs

69.5% of Cap.

OVERSIZE LOAD

1926.1424 Work area control.

(a) Swing radius hazards.

(b) Where any part of a crane/derrick is within the working radius of another crane/derrick, the controlling entity must institute a system to coordinate operations.

If there is no controlling entity, the employer (if there is only one employer operating the multiple pieces of equipment), or employers, must institute such a system.

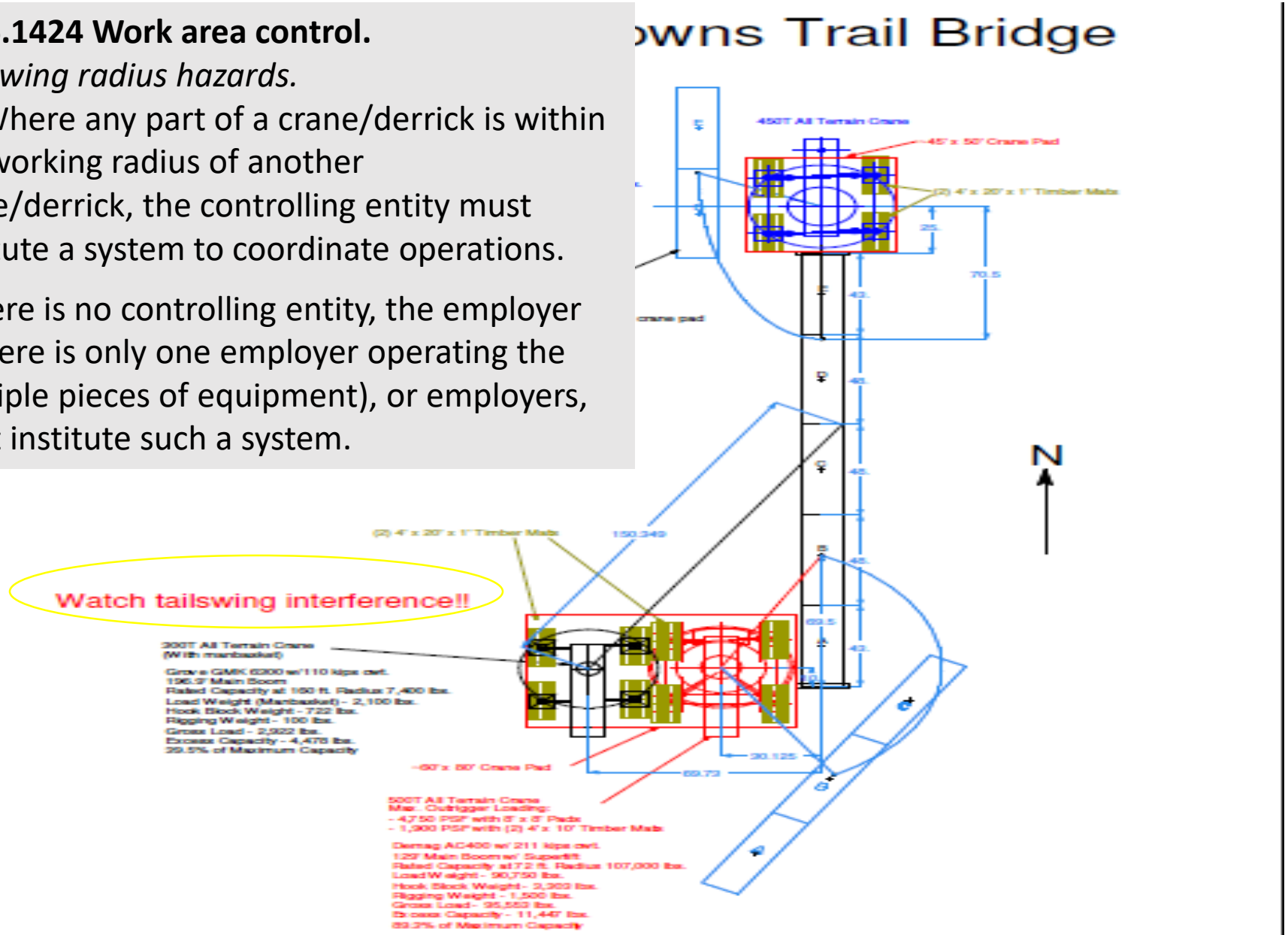

Lessons Learned

[redacted] CRITICAL/ENGINEERED LIFT PERMIT

Project Name: [redacted]
Project #: 001031
Location of Lift: SOUTH SIDE & WEST SIDE
Date of Lift:
Description of Load: AIR UNIT

Load Weight * 16,000 # *
Block Weight
Spreader Weight
Rigging Weight 100 #
Jib Weight
Jib Ball Weight 700 #
Hoist Line Weight 500 #
TOTAL LOAD { 17,300 # }

* Load Weight *
How Determined MANUFACTURER
By Whom XXXX of XXXX

Crane Manufacturer GROVE
Serial No.

Maximum Load Radius 200 ft
(from Center Pin B)
Boom Angle 70°
Model Number GMK 6300 B
On Outriggers YES
On Tires
On Crawlers-Extended
-Retracted
Boom Length 107 ft

Counterweight 220,000
Jib Length 174 ft
Lift Will Be On - Boom
Lift Will Be - Over The Side 360° CHART
Jib 174 Ft Parts of Line 1
Over The End 360° CHART

**********CRANE RATED CAPACITY 17,400# **********

Lifting Percentage of Capacity = TOTAL LOAD X 100 = RATED CAP. 99%

Are There Underground Hazards? Yes____ No X
Soil Condition (Explain type) ASPHALT & DIRT (3 SETUP)

Will Blocking or Crane Mats Be Used? Yes X No
Are There Fire or Explosive Hazards Within Reach? Yes____ No____
Are There Electrical Hazards Within Reach? Yes____ No____

Prepared By: [redacted]
Date: XX - XX - XX
Operator:
Lift Supervisor:
Craft Supervisor:
Project Mngr./Supt.: [redacted]

LIFTS EXCEEDING 90% OF RATED CAPACITY MUST COMPLY WITH THE ADDITIONAL REQUIREMENTS OF AN ENGINEERED LIFT.

copy: Operations Manager and Safety Department

ght, Clearance & Rigging Diagram - Commercial
ms: A1, A2 Qty: 2 Tag(s): RTU-1, RTU-3

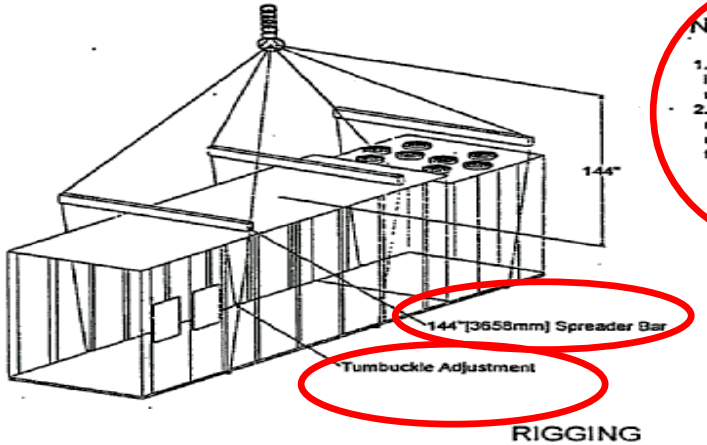

NOTES:

1. The actual weight is stamped on the unit nameplate.
2. The weight shown represent the typical unit operating weights for the unit selected.

When double wall construction is selected, add 1150 lbs [522kg] to total weight.

RIGGING

Total Unit Weight	POINT WEIGHTS lb									
	1	2	3	4	5	6	7	8	9	10
14800 11:58	1130	1210	1290	1380	1430	1520	1580	1690	1730	1840
15950 X / Y	4 / 4	4 / 136	120 / 4	120 / 136	215 / 4	215 / 136	309 / 4	309 / 136	396 / 4	396 / 136

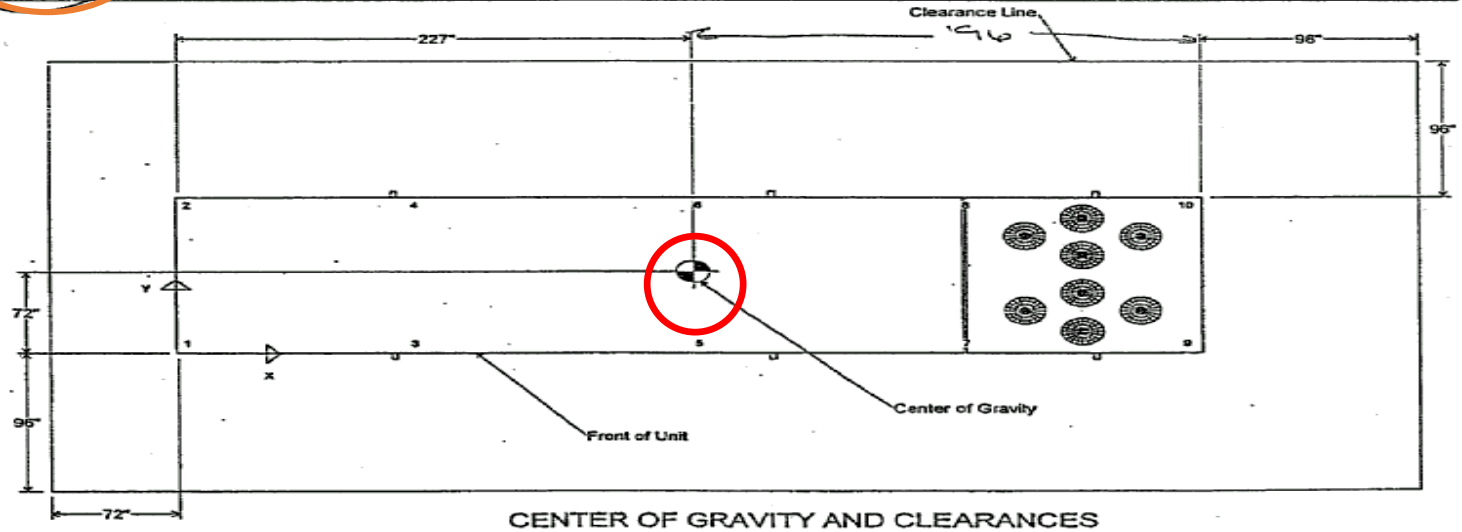

CENTER OF GRAVITY AND CLEARANCES

Luffing fly jib

Lifting capacity tables acc. to 85% (lbs / ft)

3 047 414 ← Load Chart Number

	Crane with 220 400 lbs (100 t) counterweight (supporting span 28.5 x 27.9 ft)						
	Lengths of luffing fly jib 173.9 ft						
	Angle of main boom 70°						
	Main boom - fixed length in ft						
	50.7 + 8.2	72.2 + 8.2	86.5 + 8.2	107.6 + 8.2	122.8 + 8.2	144.1 + 8.2	159.6 + 8.2
Tel. sec. I	0,00	0,60	1,00	1,00	1,00	1,00	1,00
Tel. sec. II	0,00	0,00	0,00	0,58	1,00	1,00	1,00
Tel. sec. III	0,00	0,00	0,00	0,00	0,00	0,58	1,00
Tel. sec. IV	0,00	0,00	0,00	0,00	0,00	0,00	0,00
Slewing range	360°						
Radius in feet	Lifting capacities in 1000 lbs						
105	28.8						
110	28.6						
115	28.4						
120	28.0	25.2					
125	27.6	25.2	23.0				
130	27.0	24.8	22.8				
135	26.2	24.6	22.8				
140	25.4	24.6	22.6	19.2			
145	24.4	24.4	22.4	19.2	16.6		
150	24.0	24.0	22.2	19.0	16.6		
155	23.2	23.8	22.2	19.0	16.6		
160	22.2	23.4	22.2	19.0	16.4	11.6	
165	20.6	22.8	22.0	19.0	16.0	11.4	
170	19.0	22.4	21.8	18.8	15.4	11.2	7.8
175	17.2	20.8	21.6	18.8	15.0	10.8	7.4
180	15.6	19.2	21.0	18.6	14.4	10.4	7.0
185		17.6	19.8	18.2	14.0	10.0	6.8
190		16.0	18.6	18.0	13.4	9.6	6.4
195			17.2	17.8	13.2	9.2	6.0
200				17.4	12.8	8.8	5.8
205					12.4	8.4	5.4
210					12.2	8.2	5.2
215							5.0
SLI Code	864						
Max. permitted windspeed	10 m/s	8 m/s		6 m/s			

mph 22.37 17.895 13.421

3 047 434 ← Load Chart Number

	Crane with 176 300 lbs (80 t) counterweight (supporting span 28.5 x 27.9 ft)						
	Lengths of luffing fly jib 173.9 ft						
	Angle of main boom 70°						
	Main boom - fixed length in ft						
	50.7 + 8.2	72.2 + 8.2	86.5 + 8.2	107.6 + 8.2	122.8 + 8.2	144.1 + 8.2	159.6 + 8.2
Tel. sec. I	0,00	0,60	1,00	1,00	1,00	1,00	1,00
Tel. sec. II	0,00	0,00	0,00	0,58	1,00	1,00	1,00
Tel. sec. III	0,00	0,00	0,00	0,00	0,00	0,58	1,00
Tel. sec. IV	0,00	0,00	0,00	0,00	0,00	0,00	0,00
Slewing range	360°						
Radius in feet	Lifting capacities in 1000 lbs						
105	28.8						
110	28.6						
115	28.4						
120	28.0	25.2					
125	27.6	25.2	23.0				
130	27.0	24.8	22.8				
135	26.2	24.6	22.8				
140	25.4	24.6	22.6	19.2			
145	24.4	24.4	22.4	19.2	16.6		
150	24.0	24.0	22.2	19.0	16.6		
155	23.2	23.8	22.2	19.0	16.6		
160	22.2	23.4	22.2	19.0	16.4	11.6	
165	20.6	22.8	22.0	19.0	16.0	11.4	
170	19.0	22.4	21.8	18.8	15.4	11.2	7.8
175	17.2	20.8	21.6	18.8	15.0	10.8	7.4
180	15.6	19.2	21.0	18.6	14.4	10.4	7.0
185		17.6	19.8	18.2	14.0	10.0	6.8
190		16.0	18.6	17.6	13.4	9.6	6.4
195			17.2	16.8	13.2	9.2	6.0
200				16.2	12.8	8.8	5.8
205					12.4	8.4	5.4
210					12.2	8.2	5.2
215							5.0
SLI Code	764						
Max. permitted windspeed	10 m/s	8 m/s		6 m/s			

Working range curves - main boom with luffing fly jib, position of the main boom 70°

Hook block	80 Ton 3-Sh.	1 Sh. 35 Ton	Ball 13 t
Lifting capacities in lbs	175 000	77 200	26 500
Distance H in ft	10.8	10.5	8.0

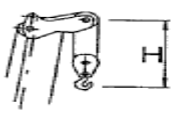

Height (ft)

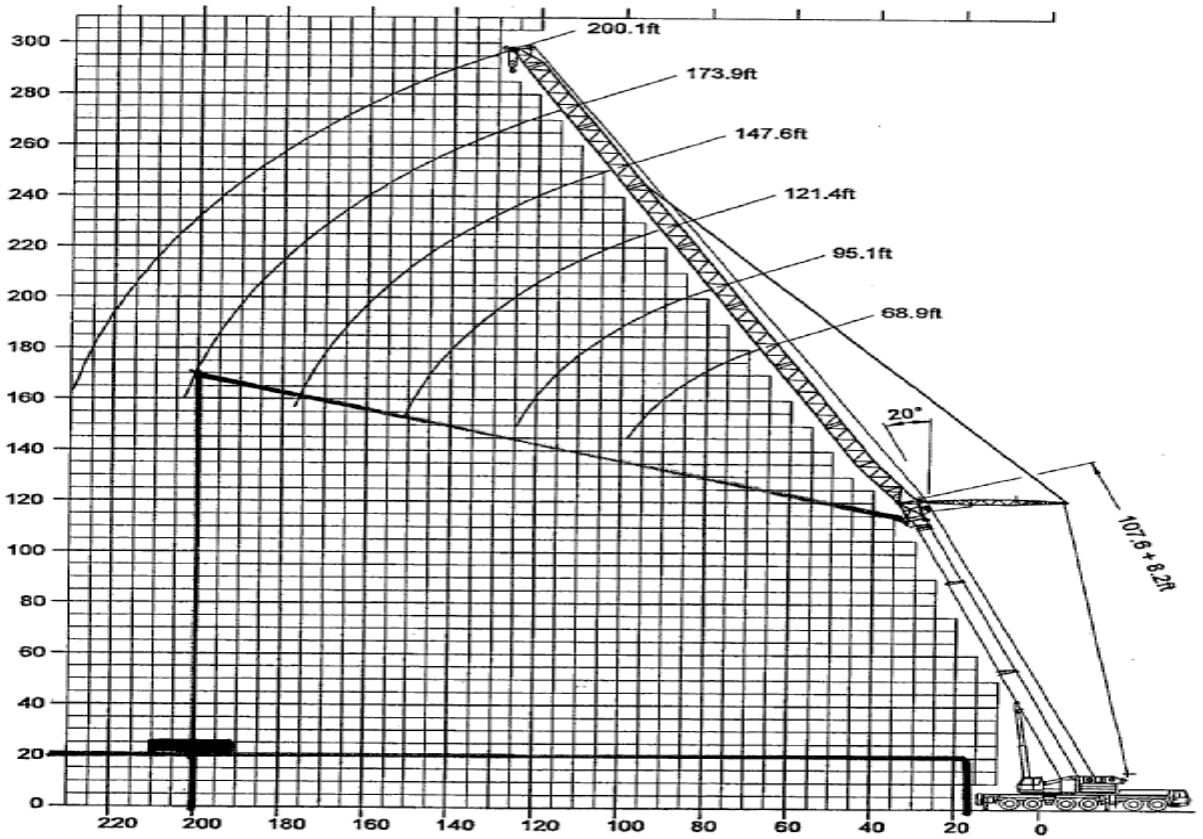

Radius (ft)

These hook height curves are only valid in conjuction with the radii listed in the lifting capacity tables.

The sheaves and hook heights are calculated theoretically. The actual values deviate from these values due to the deflecion of the boom, depending on the load.

K1-U-2

Brookdale Regional Center Mall

Weight, Clearance & Rigging Diagram - Commercial Rooftop Air Conditioning Units (Large)
Items: A1, A2 Qty: 2 Tag(s): RTU-1, RTU-3

Item C6

Field In
Conver
Powere
Referei

Produc
Item E1

Field In
Single s

Item E2

Field In
Single s

Item E3

Field In
Single s

Item E4

Field Ins
Single st

3/4 x 16' - steel - (6) 96 ft of slings

12' Spreaders Bars (3)

3/4" x 12' - steel (4) - 48' of slings

18 - 3/4" shackles -

(2) - 3 Ton chain Fall lbs

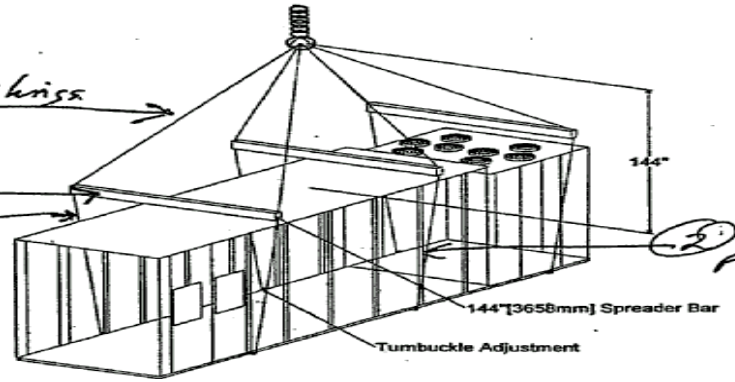

NOTES:

1. The actual weight is stamped on the unit nameplate.
2. The weight shown represent the typical unit operating weights for the unit selected.

When double wall construction is selected, add 1150 lbs [522kg] to total weight.

15,950#

RIGGING

Total Unit Weight	POINT WEIGHTS lb									
	1	2	3	4	5	6	7	8	9	1
14,800 / 15,950	1130	1210	1290	1380	1430	1520	1580	1690	1730	18
X / Y	4 / 4	4 / 136	120 / 4	120 / 136	215 / 4	215 / 136	309 / 4	309 / 136	396 / 4	396 /

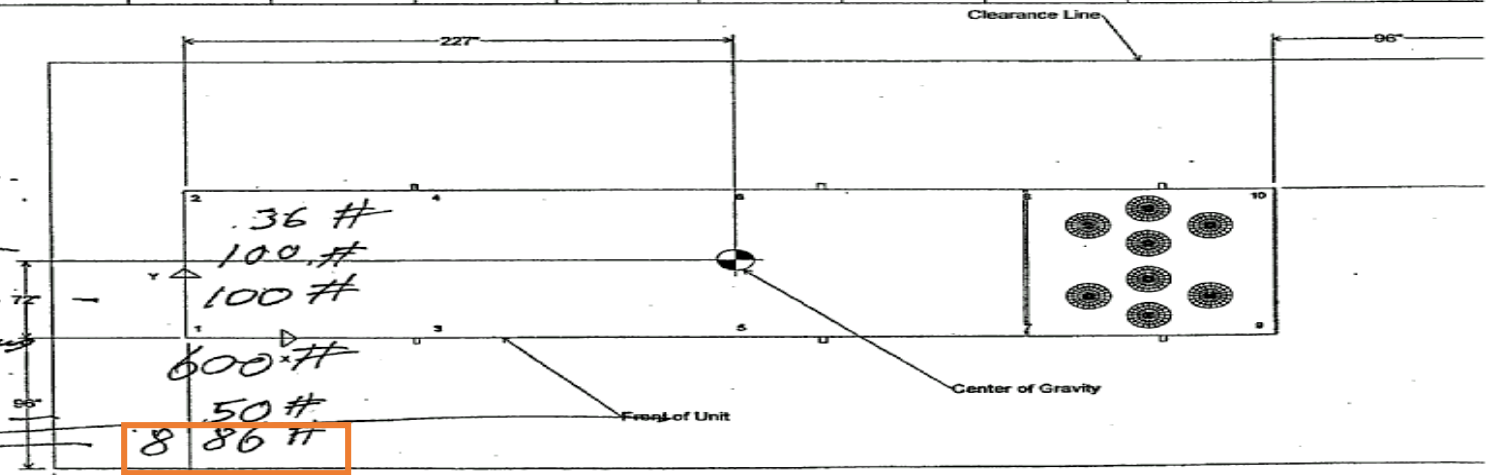

CENTER OF GRAVITY AND CLEARANCES

Total WT of Rigging

8 - shackles 36 #
2 - Chain Falls 100 #
6 ft of spreader m. 100 #
12' spreader Bars 200# each. 600 #
8 ft of Rigging 50 #
TOTAL - 886 #

1/4" shackles - 2 # each
3/4" steel cable 1.04# per ft
" steel cable 1.85 per ft
hain Falls 50 # each

Luffing fly jib

Lifting capacity tables acc. to 85% (lbs / ft)

3 047 414 ← Load Chart Number

	Crane with 220 400 lbs (100 t) counterweight (supporting span 28.5 x 27.9 ft)						
	Lengths of luffing fly jib 173.9 ft						
	Angle of main boom 70°						
	Main boom - fixed length in ft						
	50.7 + 8.2	72.2 + 8.2	86.5 + 8.2	107.6 + 8.2	122.8 + 8.2	144.1 + 8.2	159.6 + 8.2
Tel. sec. I	0,00	0,60	1,00	1,00	1,00	1,00	1,00
Tel. sec. II	0,00	0,00	0,00	0,58	1,00	1,00	1,00
Tel. sec. III	0,00	0,00	0,00	0,00	0,00	0,58	1,00
Tel. sec. IV	0,00	0,00	0,00	0,00	0,00	0,00	0,00
Slewing range	360°						
Radius in feet	Lifting capacities in 1000 lbs						
105	28.8						
110	28.6						
115	28.4						
120	28.0	25.2					
125	27.6	25.2	23.0				
130	27.0	24.8	22.8				
135	26.2	24.6	22.8				
140	25.4	24.6	22.6	19.2			
145	24.4	24.4	22.4	19.2	16.6		
150	24.0	24.0	22.2	19.0	16.6		
155	23.2	23.8	22.2	19.0	16.6		
160	22.2	23.4	22.2	19.0	16.4	11.6	
165	20.6	22.8	22.0	19.0	16.0	11.4	
170	19.0	22.4	21.8	18.8	15.4	11.2	7.8
175	17.2	20.8	21.6	18.8	15.0	10.8	7.4
180	15.6	19.2	21.0	[illegible]	14.4	10.4	7.0
185		[illegible]	[illegible]	18.2	[illegible]	[illegible]	[illegible]
190		16.0	18.6	[illegible]	13.4	9.6	6.4
195			17.2	17.8	13.2	9.2	6.0
200				17.4	12.8	8.8	5.8
205					12.4	8.4	5.4
210					12.2	8.2	5.2
215							5.0
SLI Code	864						
Max. permitted windspeed	10 m/s	8 m/s		6 m/s			
mph	22.37	17.895		13.421			

Actual Load = 18,086 lbs
104% of the chart

ASSOCIATED GENERAL CONTRACTORS of MINNESOTA

- HOISTING INFORMATION AND PLANNING WORK SHEET -

Job Description Job Number Date:

Lift Plan Prepared By:

Location of Lift :

Operator Name: Crane Model: Crane Serial No.

Crane Owner: Contact Person:

Weight of the Load Information Provided By:

- Rigging Components –

Sling Type: ☐ Wire Rope ☐ Synthetic Web –

☐ Synthetic Round ☐ Alloy Chain –

Sling – Size: _____

- Length: _____

- Weight: _____

- Angles: _____ (have sling angles below 30° been eliminated)

Shackle – Size _____ Shackle -Weight _____

- LIFT INFORMATION -

Weight of the Load : _____ Lbs

Allowance For Extra Weight : _____ Lbs

(Scale, Sludge, Internals, Liquid, Etc)

Weight of Rigging : _____ Lbs

Weight of Block: _____ Lbs

Weight of Head Ache Ball : _____ Lbs

Weight of Spreader : _____ Lbs

Weight of Jib : _____ Lbs

Weight of Hoist Line : _____ Lbs

Weight of Attachments : _____ Lbs

TOTAL WEIGHT TO BE LIFTED: _____ **Lbs**

Max. Radius To Be Used : _____ Ft.

Boom Length : _____ Ft.

Boom Angle : _____ Degrees.

On Out Riggers Yes _____ No _____

On Crawlers Extended _____ Retracted _____

On Tires : Yes _____ No _____

Will Blocking or Crane Mats be used Yes ____ No ____

Parts of Line _____

Counterweight _____ Lbs

Lift Over : Front _____ Side _____ Rear _____ 360° _____

Est. Clearance between Boom and Surrounding Utilities _____ Ft.

Below ground Hazards been identified and located : Yes _____ No ____

Capacity From Chart : _____ Lbs

% of Capacity _____ (See example below)

Example:

Total Weight to be Lifted : _____ Lbs

X 100 % = _____ Lbs

Divided By

100 % of Rated Capacity of the Load Chart = _____%

HAS PLAN INFORMATION BEEN COMMUNICATED (Y) - (N)

- LIFT DIAGRAM -

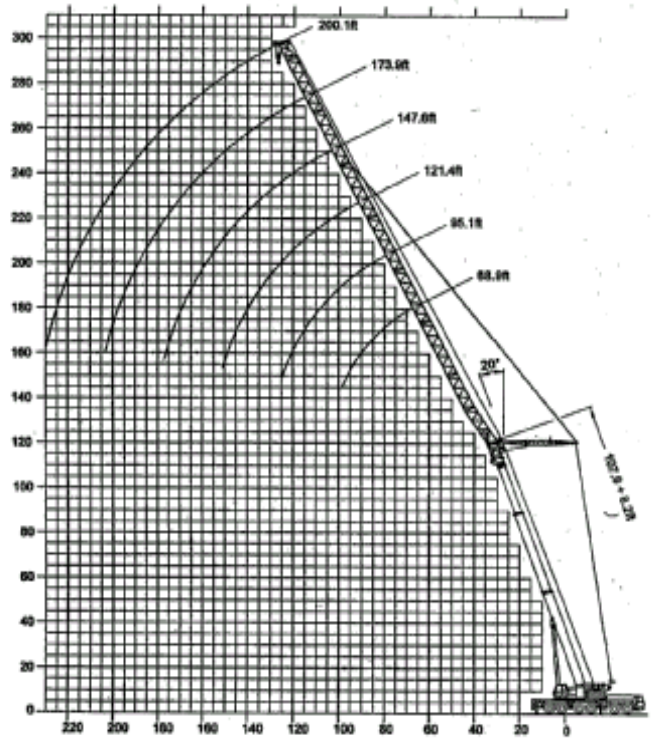

- Rigging Diagram -

- Crane Setup Diagram -

Over the Front:
Over the Side:
Over the Rear:
360°
Soil Conditions (explain type)

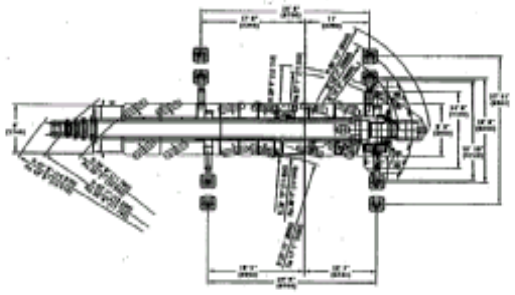

CRANE MANAGER 2014 - DEMO mode

File Extras Prepaid View Window ?

Theme: CMLightBlue

Crane selection - graphical | Job-site

Define radius, gross load, height

Smallest radius to reach	14.00 m	Largest radius to reach	11.00 m
gross load	6.00 t	Reserve	0.00 %
Height	82.00 m	Clearance to hook	2.00 m

Define crane setup

Crane model		Support	
Combination		Counterweight	t
Chart-number		Parts of line	
MB-length	m	SL-counterweight	t
MB-angle	°	SL-cwt-radius	m
Tele-sequence	%	SL-boom radius	m
Jib-length	m	Crawler pads width	m
Jib-angle	°		

Define obstacle

Width	23.00 m	Distance to obstacle	40.00 m

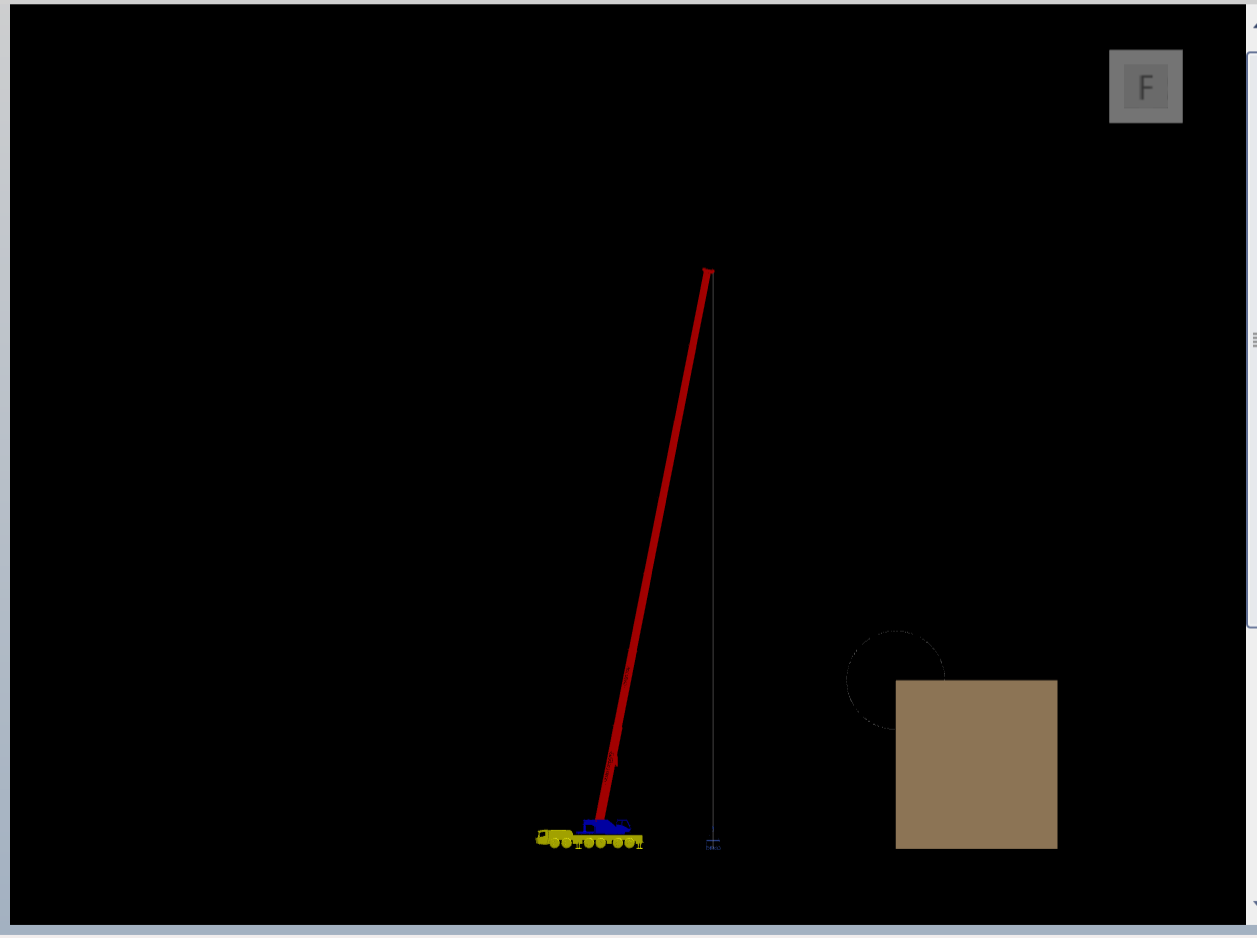

Count: 0

300T to 450T crane
SEARS

RIG TO
THE CENTER OF GRAVITY

CENTER OF GRAVITY IS DIRECTLY BELOW THE LOAD HOOK

&

CONNECTION TO LOAD IS ABOVE CENTER OF GRAVITY

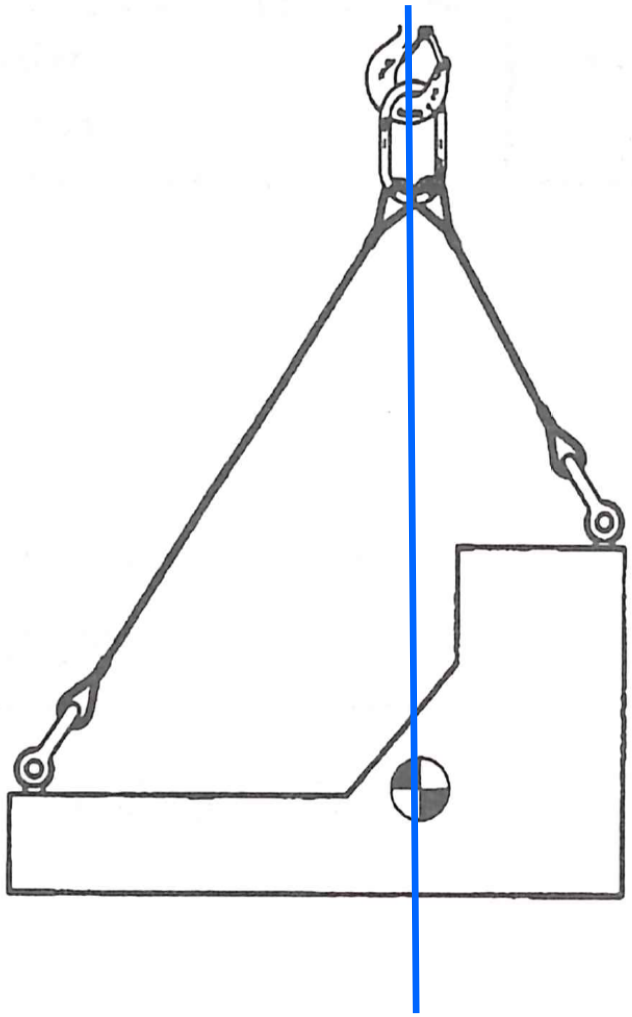

(POH684A)

6
BENNETT
OVER SIZE LOAD

LOAD STABILITY AND THE CENTER OF GRAVITY

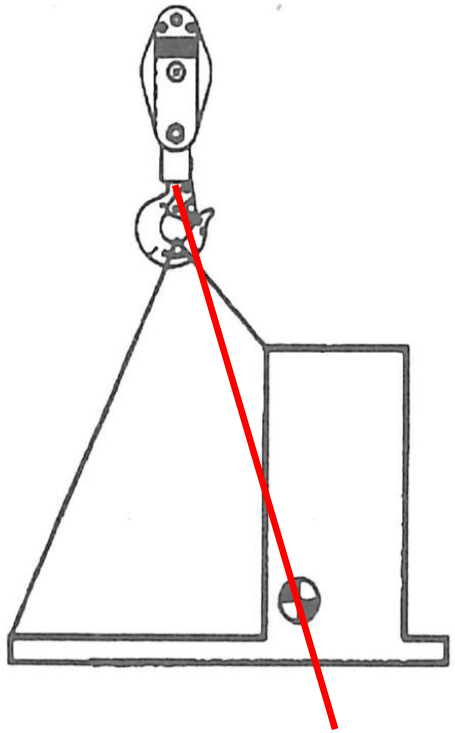

NOT RIGGED TO CENTER OF GRAVITY

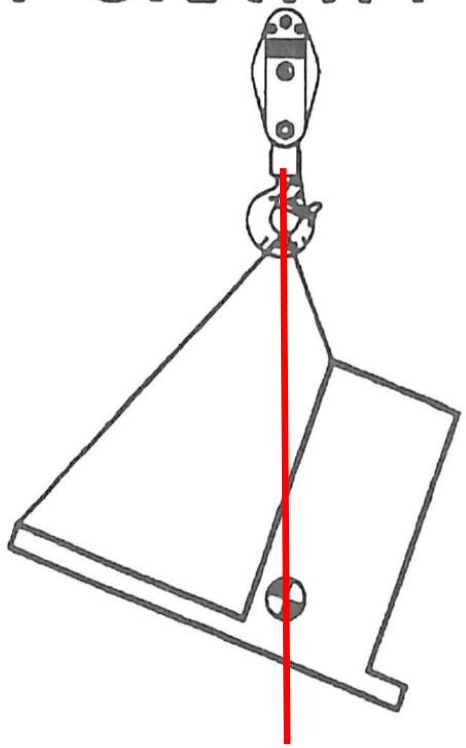

LOAD IS UNSTABLE AND WILL SHIFT - C.O.G. WILL MOVE TO DIRECTLY BELOW THE HOOK

(POH684B)

6
OVER SIZE LOAD

GROVE
BENNETT

FOX 23

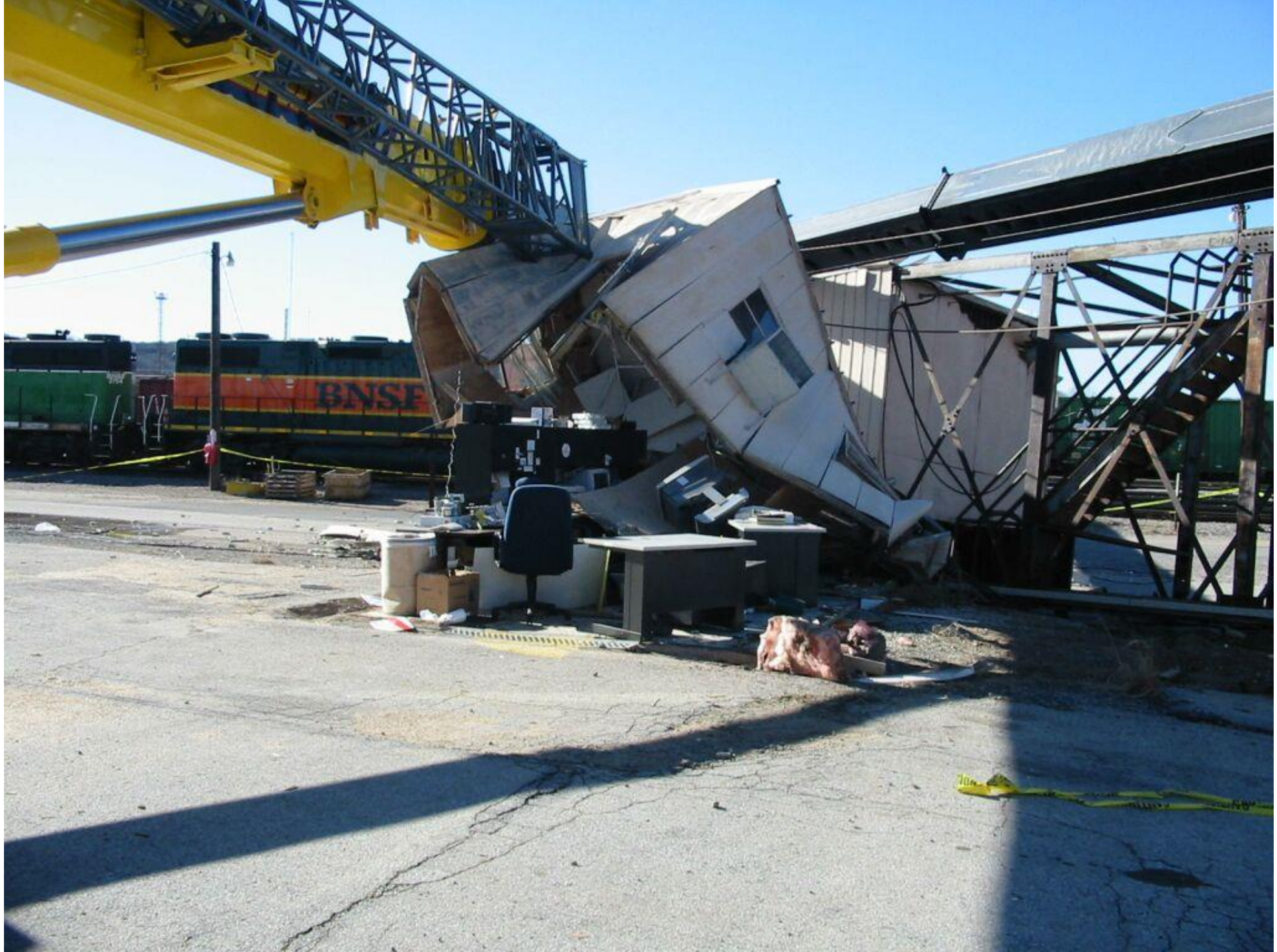
BNSF

Grove RT870

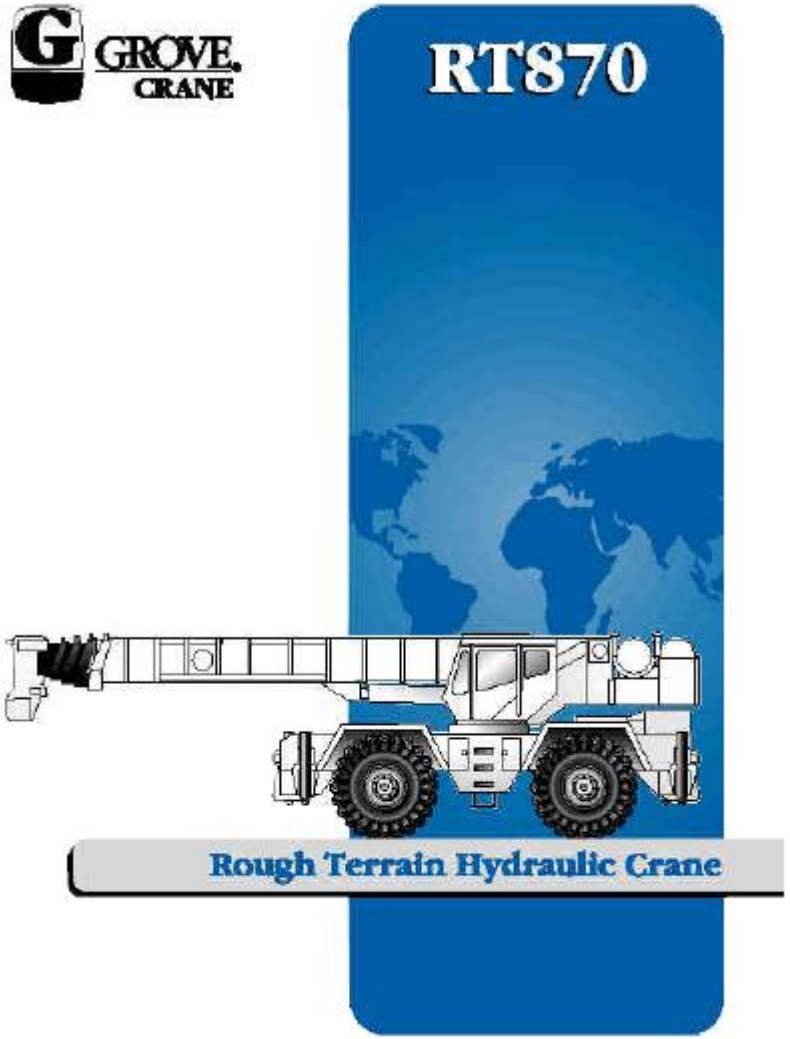

Exercise 1 – Telescopic Boom

- **GROVE RT870**

Working range

40 - 125 ft.
(12 - 38 m)

35 - 60 ft.
(10.6 - 18.2 m)

11,500 lbs.
(5216 kg)

100%

360°

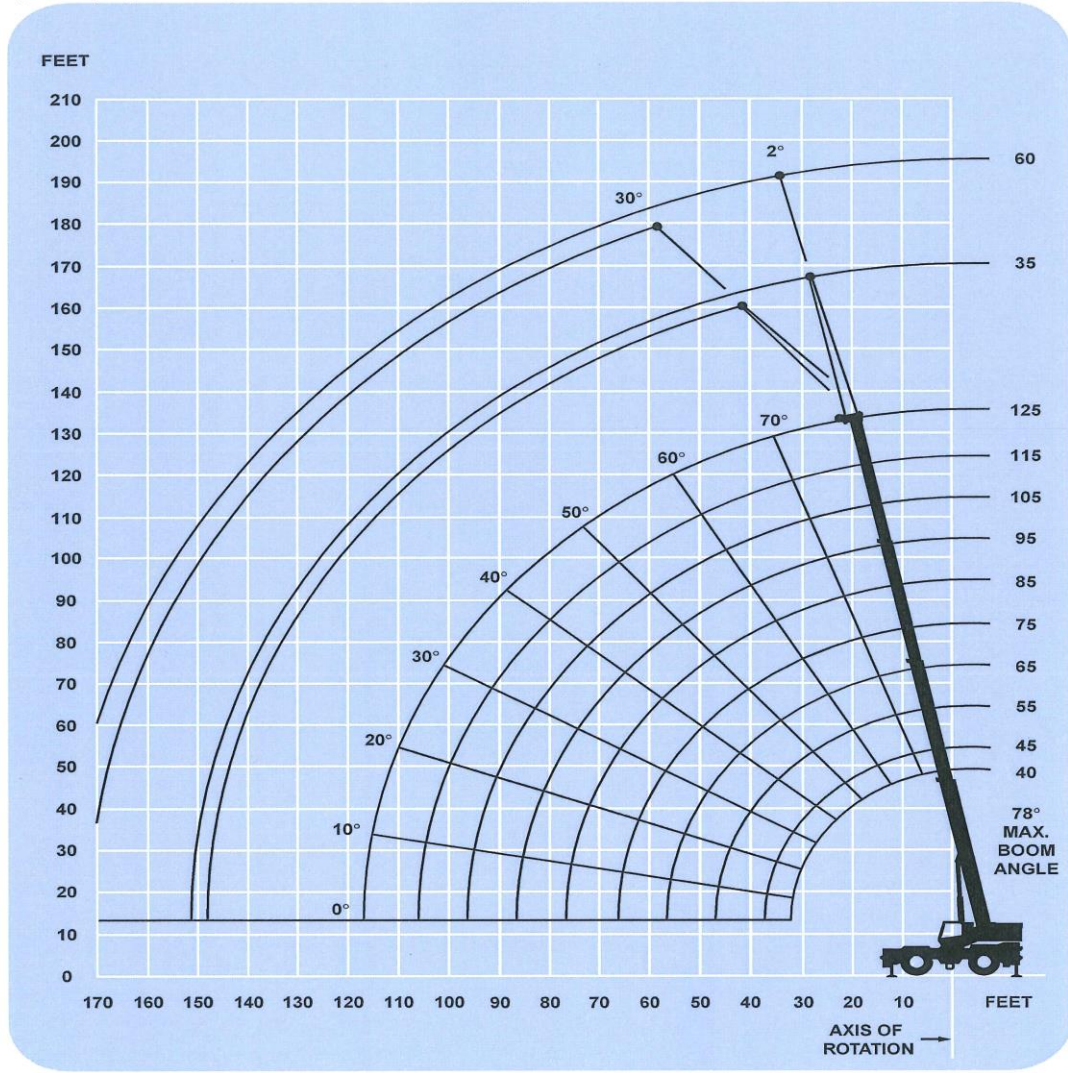

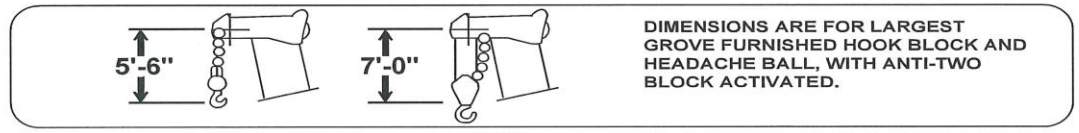

DIMENSIONS ARE FOR LARGEST GROVE FURNISHED HOOK BLOCK AND HEADACHE BALL, WITH ANTI-TWO BLOCK ACTIVATED.

ASSOCIATED GENERAL CONTRACTORS of MINNESOTA

- HOISTING INFORMATION AND PLANNING WORK SHEET -

Job Description Job Number Date:

Lift Plan Prepared By:

Location of Lift :

Operator Name: Crane Model: Crane Serial No.

Crane Owner: Contact Person:

Weight of the Load Information Provided By:

- Rigging Components –

Sling Type: ☐ Wire Rope ☐ Synthetic Web – ☐ Synthetic Round ☐ Alloy Chain –

Sling – Size: _____

- Length: _____

- Weight: _____

- Angles: _____ (have sling angles below 30° been eliminated)

Shackle – Size _____ Shackle -Weight _____

- LIFT INFORMATION -

Weight of the Load : _____ Lbs

Allowance For Extra Weight : _____ Lbs

(Scale, Sludge, Internals, Liquid, Etc)

Weight of Rigging : _____ Lbs

Weight of Block: _____ Lbs

Weight of Head Ache Ball : _____ Lbs

Weight of Spreader : _____ Lbs

Weight of Jib : _____ Lbs

Weight of Hoist Line : _____ Lbs

Weight of Attachments : _____ Lbs

TOTAL WEIGHT TO BE LIFTED: _____ **Lbs**

Max. Radius To Be Used : _____ Ft.

Boom Length : _____ Ft.

Boom Angle : _____ Degrees.

On Out Riggers Yes ____ No ____

On Crawlers Extended ____ Retracted ____

On Tires : Yes ____ No ____

Will Blocking or Crane Mats be used Yes ____ No ____

Parts of Line _____

Counterweight _____ Lbs

Lift Over : Front ____ Side ____ Rear ____ 360° ____

Est. Clearance between Boom and Surrounding Utilities _____ Ft.

Below ground Hazards been identified and located : Yes ____ No ____

Capacity From Chart : _____ Lbs

% of Capacity _____ (See example below)

Example:

Total Weight to be Lifted : _____ Lbs

X 100 % = _____ Lbs

Divided By

100 % of Rated Capacity of the Load Chart = _____ %

HAS PLAN INFORMATION BEEN COMMUNICATED (Y) - (N)

- LIFT DIAGRAM -

WORKING RANGE DIAGRAM

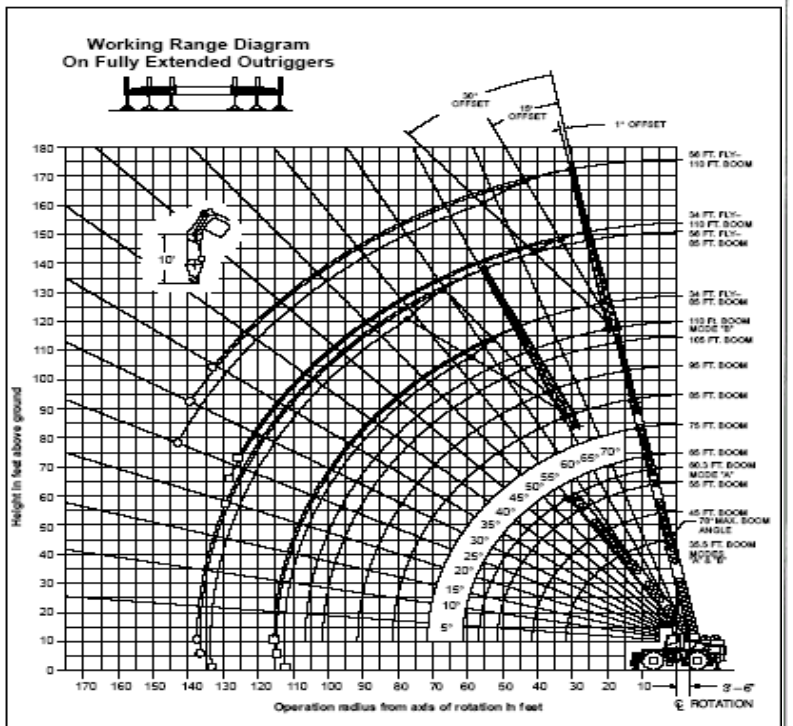

○ Denotes Main Boom + 56' Fly–Boom Mode "B"
□ Denotes Main Boom + 34' Fly–Boom Mode "B"
Note: Boom and fly geometry shown are for unloaded condition and crane standing level on firm supporting surface. Boom deflection, subsequent radius and boom angle change must be accounted for when applying load to hook.

⚠ WARNING

Do Not Lower The Boom Below The Minimum Boom Angle For No Load As Shown In The Above Chart For The Boom Lengths Shown. Loss Of Stability Will Occur Causing A Tipping Condition.

- Rigging Diagram -

- Crane Setup Diagram -

Over the Front:

Over the Side:

Over the Rear:

360°

Soil Conditions (explain type)

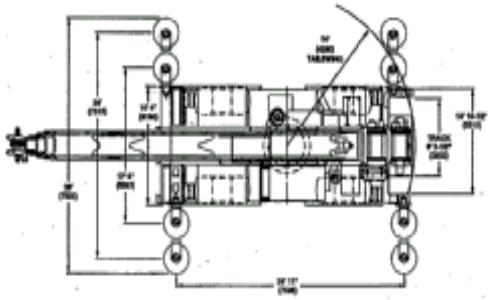

Rated lifting capacities

NOTES FOR LIFTING CAPACITIES

WARNING: THIS CHART IS ONLY A GUIDE.
The notes below are for illustration only and should not be relied upon to operate the crane. The individual crane's load chart, operating instructions and other instruction plates must be read and understood prior to operating the crane.

1. All rated loads meet ANSI/ASME B30.5, Mobile and Locomotive Cranes. Testing and development were performed to SAEJ1063, Cantilevered Boom Crane Structures - Method of Test, and SAEJ765 Crane Stability Test Code.

2. Rated loads include the weight of hookblock, slings and auxiliary lifting devices and their weights shall be subtracted from the listed rating to obtain the net load to be lifted. When more than the minimum required hoist reeving is used, the additional rope weight shall be considered part of the load to be handled.

3. Capacities appearing above the bold line are based on structural strength. Tipping should not be relied upon as a capacity indication. The designated crane load chart indicates crane capacity.

4. The machine shall be leveled on a firm supporting surface. Depending on the nature of the supporting surface, it may be necessary to have structural supports under the outrigger floats or tires to spread the load to a larger bearing surface.

5. When either boom length or radius or both are between values listed, the smallest load shown at either the next larger radius or next longer or shorter boom length shall be used.

6. Tires shall be inflated to the recommended pressure before lifting on rubber.

7. For outrigger operation, outriggers shall be properly extended with tires raised free of crane weight before operating the boom or lifting loads.

Link-Belt
Radius
in feet
C/L
Rotation

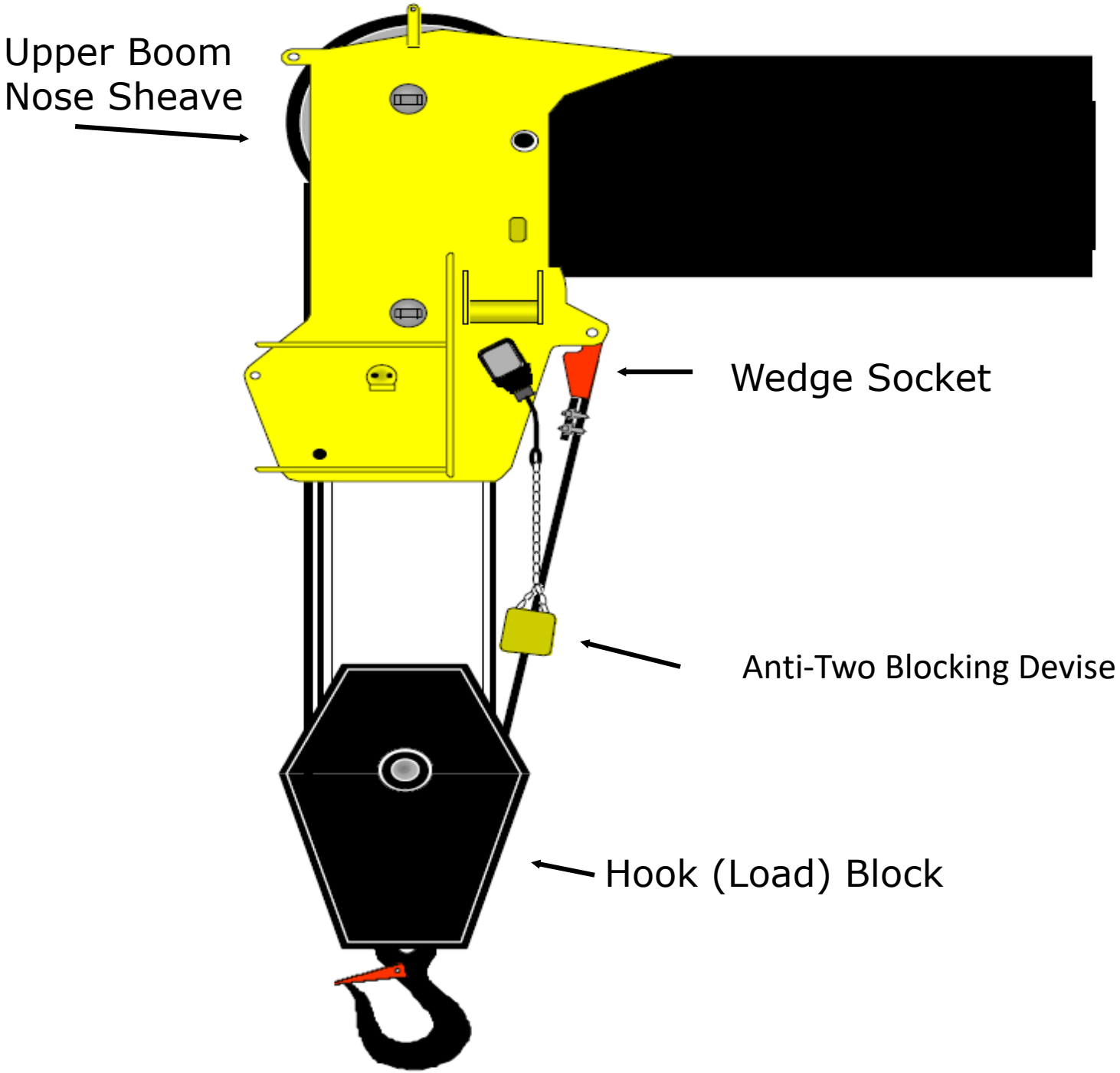
Upper Boom
Nose Sheave
Wedge Socket
Anti-Two Blocking Devise
Hook (Load) Block

Superstructure specifications

Boom
40 ft. - 125 ft. (12 m - 38 m) four-section, full power boom. Maximum tip height: 135 ft. (41 m).

Lattice Extension
35 ft. - 60 ft. (10.6 m - 18.2 m) telescoping lattice swingaway extension offsettable at 2° or 30°. Stows alongside base boom section.
Maximum tip height: 193 ft. (59 m).

*Optional Lattice Extension
35 ft. (10.6 m) lattice swingaway extension. Offsettable at 2° or 30°. Stows alongside base boom section.
Maximum tip height: 169 ft. (51.5 m).

Boom Nose
Six Nylatron sheaves mounted on heavy duty tapered roller bearings with removable pin-type rope guards. Quick reeving type boom nose. Removable auxiliary boom nose with removable pin type rope guard.

Boom Elevation
One double acting hydraulic cylinder with integral holding valve provides elevation from -3° to 78°.

Load Moment & Anti-Two Block System
Standard load moment and anti-two block system with audio-visual warning and control lever lockout. These systems provide electronic display of boom angle, boom length, radius, tip height, relative load moment, maximum permissible load, load indication and warning of impending two-block condition.

Cab
Full vision, all galvanealed steel fabricated with acoustical lining and tinted safety glass throughout. Deluxe seat with armrest mounted hydraulic single axis controllers. Dash panel incorporates gauges for all engine functions. Other standard features include: skylight screen, hydraulic oil cab heater/defroster, telescoping tilt wheel, sliding side and rear windows, opening skylight, electric windshield wash-wipe, electric skylight wipers, fire extinguisher, seat belt, ashtray and level indicator.

Swing
Planetary swing with foot applied multi-disc wet brake. Spring applied, hydraulically released swing brake, 360° positive swing lock (N.Y.C. style) and 1 position mechanical house lock, operated from cab.
Maximum speed: 2.0 RPM.

Counterweight
Removable: 11,500 lbs. (5216 kg).
2,155 lbs. (977 kg) slab I.P.O. auxiliary hoist.

Hydraulic System
Seven main pumps with a combined capacity of 19 GPM (754 LPM).
Maximum operating pressure: 3500 psi (241 bar).

Three individual valve banks.

Return line type filter with full flow by-pass protec and service indicator. Replaceable cartridge with m filtration rating of 5/12/16.

200 gallon (757 L) reservoir.

Remote mounted oil cooler with thermostatically controlled hydraulic motor driven fan/air to oil.

System pressure test panel with quick release type fittings for each circuit.

Hoist Specifications
Main and Auxiliary Hoist
Planetary reduction with automatic spring applied multi-disc brake. Electronic hoist drum rotation indicator, and hoist drum cable followers.

Maximum Single Line Pull:	16,969 lbs. (7697 kg)
Maximum Single Line Speed:	517 FPM (157 m/min)
Maximum Permissible Line Pull:	12,920 lbs. (5860 kg)
Rope Diameter:	3/4" (19 mm)
Rope Length:	650 ft. (198 m)
Maximum Rope Stowage:	1,163 ft. (354.5 m)

*Denotes optional equipment

REASON FOR MULTIPLE PARTS OF LINE….

If line pull is 13,000 lb., multiply this by parts of line.

13,000 x 2 = 26,000 lb.

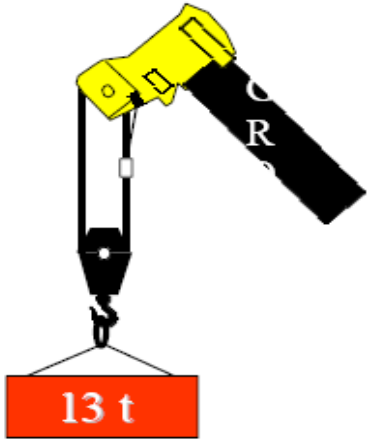

13,000 x 4 = 52,000 lb.

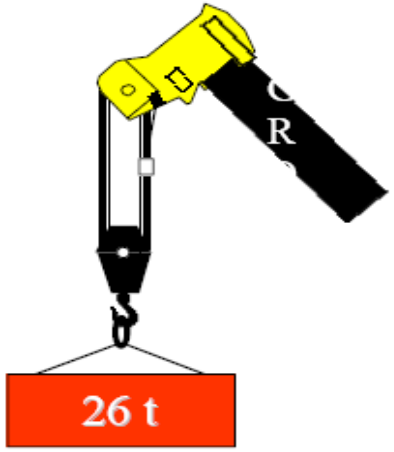

13,000 x 6 = 78,000 lb.

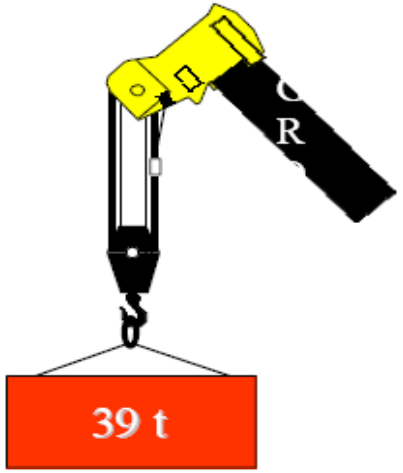

PICK GREATER LOADS

Remember: The load raises more slowly with multiple parts of line.

WEIGHT REDUCTIONS FOR LOAD HANDLING DEVICES

Permissible Line Pull 12,920
Maximum Single Line Pull 16,969

35 FT. BOOM EXTENSION	
*Stowed -	767 lbs.
*Erected -	4,823 lbs.
35 - 60 FT. TELE. BOOM EXTENSION	
*Stowed -	1,033 lbs.
*Erected (Retracted) -	6,499 lbs.
*Erected (Extended) -	8,740 lbs.

*Reduction of main boom capacities

AUXILIARY BOOM HEAD	112 lbs.
HOOKBLOCKS and HEADACHE BALLS:	
70 Ton, 6 Sheave w/cheekplates	2,010 lbs.+
70 Ton, 6 Sheave w/o cheekplates	1,674 lbs.+
15 Ton,1 Sheave	420 lbs.+
10 Ton Headache Ball	560 lbs.+

+Refer to rating plate for actual weight.

40 - 125 ft.
(12 - 38 m)

11,500 lbs.
(5216 kg)

100%

360°

Pounds

Feet	40	45	55	65	75	85	95	105	115	125
10	140,000 (70)	105,000 (72.5)								
12	111,000 (67)	105,000 (70)	94,600 (74)							
15	91,450 (61.5)	91,000 (65.5)	88,250 (70.5)	71,050 (74)						
20	69,550 (52.5)	69,050 (58)	68,400 (65)	60,400 (69)	55,250 (72.5)	48,150 (75)				
25	55,050 (41.5)	54,600 (49.5)	53,950 (58.5)	53,450 (64.5)	47,950 (68.5)	41,700 (71.5)	38,000 (73.5)	33,350 (75.5)		
30	42,950 (26)	42,450 (39.5)	41,700 (52)	41,200 (59)	41,950 (64)	36,700 (67.5)	33,300 (70.5)	30,750 (72.5)	24,550 (75)	*23,700 (76.5)
35		33,700 (26)	33,000 (44.5)	32,500 (53.5)	33,250 (59.5)	32,600 (64)	29,550 (67)	27,300 (69.5)	21,700 (72)	21,900 (74)
40			26,650 (35.5)	26,150 (47.5)	26,900 (54.5)	27,850 (60)	26,450 (63.5)	24,450 (66.5)	19,350 (69.5)	20,300 (71.5)
45			21,750 (23)	21,300 (40.5)	22,050 (49.5)	23,000 (55.5)	23,700 (60)	22,000 (63.5)	17,450 (66.5)	18,800 (69)
50				17,500 (32.5)	18,250 (44)	19,150 (51.5)	19,900 (56.5)	19,850 (60.5)	15,800 (64)	17,050 (66.5)
60					12,400 (30)	13,250 (41.5)	14,100 (48.5)	14,650 (53.5)	13,250 (58)	14,150 (61.5)
70						9,190 (28.5)	9,910 (39)	10,400 (46)	10,850 (51.5)	11,350 (55.5)
80							6,930 (27)	6,740 (37)	7,850 (44.5)	8,290 (49.5)
90								5,170 (25.5)	5,600 (36)	6,010 (42.5)
100									3,880 (25)	4,250 (34.5)
110										2,840 (24)
Minimum boom angle (deg.) for indicated length (no load)										0
Maximum boom length (ft.) at 0 degree boom angle (no load)										125

NOTE: ( ) Boom angles are in degrees.
*Based on maximum obtainable boom angle.

A6-829-016051

Boom Angle	40	45	55	65	75	85	95	105	115
0°	22,800 (32.3)	18,250 (37.8)	12,200 (47.8)	7,990 (57.8)	5,720 (67.8)	4,320 (77.8)	3,210 (87.8)	2,380 (97.8)	1,570 (107.8)

NOTE: ( ) Reference radii are in feet.

A6-829-012282

40 - 125 ft.
(12 - 38 m)

0 lbs.
(0 kg)

100%

360°

Pounds

Feet	40	45	55	65	75	85	95	105	115	125
10	121,500 (70)	105,000 (72.5)								
12	105,000 (67)	104,500 (70)	94,600 (74)							
15	86,050 (61.5)	85,550 (65.5)	84,900 (70.5)	71,050 (74)						
20	65,000 (52.5)	64,550 (58)	63,900 (65)	60,400 (69)	55,250 (72.5)	48,150 (75)				
25	47,550 (41.5)	46,950 (49.5)	46,150 (58.5)	45,600 (64.5)	46,350 (68.5)	41,700 (71.5)	38,000 (73.5)	33,350 (75.5)		
30	36,250 (26)	35,750 (39.5)	35,000 (52)	34,450 (59)	35,200 (64)	36,200 (67.5)	33,300 (70.5)	30,750 (72.5)	24,550 (75)	*23,700 (76.5)
35		28,000 (26)	27,350 (44.5)	26,850 (53.5)	27,550 (59.5)	28,550 (64)	29,300 (67)	27,300 (69.5)	21,700 (72)	21,900 (74)
40			21,750 (35.5)	21,250 (47.5)	22,000 (54.5)	22,950 (60)	23,650 (63.5)	24,250 (66.5)	19,350 (69.5)	20,300 (71.5)
45			16,200 (23)	15,900 (40.5)	16,750 (49.5)	17,900 (55.5)	18,900 (60)	19,650 (63.5)	17,450 (66.5)	18,800 (69)
50				11,600 (32.5)	12,500 (44)	13,900 (51.5)	15,000 (56.5)	15,700 (60.5)	15,800 (64)	17,050 (66.5)
60					6,630 (30)	8,120 (41.5)	9,600 (48.5)	10,250 (53.5)	10,900 (58)	11,450 (61.5)
70						4,620 (28.5)	5,870 (39)	6,540 (46)	7,210 (51.5)	7,820 (55.5)
80							3,240 (27)	3,910 (37)	4,590 (44.5)	5,240 (49.5)
90								2,000 (25.5)	2,660 (36)	3,290 (42.5)
100									1,230 (25)	1,790 (34.5)
Minimum boom angle (deg.) for indicated length (no load)										22
Maximum boom length (ft.) at 0 degree boom angle (no load)										105

NOTE: ( ) Boom angles are in degrees.
*Based on maximum obtainable boom angle.

A6-829-012262

Boom Angle	40	45	55	65	75	85	95
0°	22,800 (32.3)	18,250 (37.8)	12,200 (47.8)	6,760 (57.8)	4,000 (67.8)	2,660 (77.8)	1,680 (87.8)

NOTE: ( ) Reference radii are in feet.

40 - 125 ft.
(12 - 38 m)

11,500 lbs.
(5216 kg)

50%
17' 4" Spread

360°

Pounds

Feet	40	45	55	65	75	85	95	105	115	125
10	116,000 (70)	105,000 (72.5)								
12	102,500 (67)	102,000 (70)	94,600 (74)							
15	86,800 (61.5)	86,350 (65.5)	85,800 (70.5)	71,050 (74)						
20	67,250 (52.5)	64,850 (58)	60,550 (65)	56,950 (69)	55,250 (72.5)	48,150 (75)				
25	45,750 (41.5)	44,950 (49.5)	42,050 (58.5)	39,700 (64.5)	39,100 (68.5)	38,900 (71.5)	38,000 (73.5)	33,350 (75.5)		
30	32,500 (26)	32,050 (39.5)	31,000 (52)	29,250 (59)	29,050 (64)	29,250 (67.5)	29,300 (70.5)	29,250 (72.5)	24,550 (75)	*23,700 (76.5)
35		23,900 (26)	23,350 (44.5)	22,250 (53.5)	22,300 (59.5)	22,700 (64)	22,900 (67)	23,050 (69.5)	21,700 (72)	21,900 (74)
40			17,650 (35.5)	17,200 (47.5)	17,400 (54.5)	17,900 (60)	18,250 (63.5)	18,550 (66.5)	18,550 (69.5)	18,550 (71.5)
45			13,400 (23)	13,000 (40.5)	13,600 (49.5)	14,300 (55.5)	14,700 (60)	15,050 (63.5)	15,150 (66.5)	15,250 (69)
50				9,850 (32.5)	10,450 (44)	11,450 (51.5)	11,900 (56.5)	12,350 (60.5)	12,450 (64)	12,600 (66.5)
60					5,970 (30)	6,940 (41.5)	7,840 (48.5)	8,310 (53.5)	8,500 (58)	8,700 (61.5)
70						4,020 (28.5)	4,840 (39)	5,410 (46)	5,700 (51.5)	5,930 (55.5)
80							2,630 (27)	3,170 (37)	3,620 (44.5)	3,870 (49.5)
90								1,490 (25.5)	2,000 (36)	2,280 (42.5)
100										1,020 (34.5)
Minimum boom angle (deg.) for indicated length (no load)										27.5
Maximum boom length (ft.) at 0 degree boom angle (no load)										105

NOTE: ( ) Boom angles are in degrees.
*Based on maximum obtainable boom angle.

A6-829-011802A

Boom Angle	40	45	55	65	75	85	95
0°	22,800 (32.3)	18,250 (37.8)	11,500 (47.8)	6,220 (57.8)	3,740 (67.8)	2,350 (77.8)	1,300 (87.8)

NOTE: ( ) Reference radii are in feet.

40 - 125 ft. (12 - 38 m)	0 lbs. (0 kg)	50% 17' 4" Spread	360°

Pounds

Feet	40	45	55	65	75	85	95	105	115	125
10	116,000 (70)	105,000 (72.5)								
12	102,500 (67)	102,000 (70)	94,600 (74)							
15	84,600 (61.5)	80,100 (65.5)	73,300 (70.5)	67,700 (74)						
20	50,200 (52.5)	47,750 (58)	44,200 (65)	41,250 (69)	40,300 (72.5)	39,850 (75)				
25	33,550 (41.5)	32,250 (49.5)	29,800 (58.5)	27,800 (64.5)	27,550 (68.5)	27,700 (71.5)	27,650 (73.5)	27,550 (75.5)		
30	23,200 (26)	22,750 (39.5)	21,200 (52)	19,700 (59)	19,750 (64)	20,150 (67.5)	20,350 (70.5)	20,550 (72.5)	20,400 (75)	*20,300 (76.5)
35		16,350 (26)	15,500 (44.5)	14,250 (53.5)	14,450 (59.5)	15,000 (64)	15,350 (67)	15,650 (69.5)	15,700 (72)	15,700 (74)
40			11,400 (35.5)	10,300 (47.5)	10,650 (54.5)	11,300 (60)	11,750 (63.5)	12,100 (66.5)	12,200 (69.5)	12,300 (71.5)
45			8,300 (23)	7,400 (40.5)	7,780 (49.5)	8,484 (55.5)	8,970 (60)	9,420 (63.5)	9,570 (66.5)	9,730 (69)
50				5,120 (32.5)	5,530 (44)	6,260 (51.5)	6,790 (56.5)	7,270 (60.5)	7,460 (64)	7,660 (66.5)
60					2,250 (30)	3,010 (41.5)	3,580 (48.5)	4,100 (53.5)	4,340 (58)	4,580 (61.5)
70							1,330 (39)	1,870 (46)	2,130 (51.5)	2,410 (55.5)
Minimum boom angle (deg.) for indicated length (no load)										44
Maximum boom length (ft.) at 0 degree boom angle (no load)										68

NOTE: ( ) Boom angles are in degrees.
*Based on maximum obtainable boom angle.

A6-829-012263

Boom Angle	40	45	55	65
0°	19,600 (32.3)	13,550 (37.8)	6,750 (47.8)	2,550 (57.8)

NOTE: ( ) Reference radii are in feet.

35 - 60 ft.
(10.6 - 18.2 m)

11,500 lbs.
(5216 kg)

100%

360°

Pounds

Feet	35 ft 2° OFFSET	35 ft 30° OFFSET	60 ft 2° OFFSET	60 ft 30° OFFSET
40	*12,900 (77)			
45	11,600 (75.5)			
50	10,900 (73.5)		*6,700 (77)	
55	10,300 (71.5)	*7,500 (77)	6,320 (75)	
60	9,750 (69.5)	7,250 (74.5)	6,000 (73.5)	
65	9,250 (67.5)	7,110 (72.5)	5,630 (71.5)	
70	8,810 (65.5)	6,980 (70.5)	5,260 (70)	
75	8,400 (63.5)	6,860 (68)	4,900 (68.5)	*4,000 (77)
80	8,030 (61.5)	6,750 (66)	4,630 (66.5)	3,700 (74.5)
85	7,690 (59)	6,650 (64)	4,360 (65)	3,500 (73)
90	6,840 (57)	6,560 (61.5)	4,100 (63)	3,350 (71)
95	5,840 (54.5)	5,840 (59)	3,800 (61)	3,270 (69)
100	4,950 (52.5)	4,950 (56.5)	3,640 (59.5)	3,210 (67)
105	4,160 (50)	4,160 (54)	3,490 (57.5)	3,150 (65)
110	3,450 (47.5)	3,450 (51.5)	3,350 (55.5)	3,100 (63)
115	2,810 (44.5)	2,810 (48.5)	3,220 (53.5)	3,050 (61)
120	2,230 (41.5)	2,230 (45.5)	3,100 (51)	3,010 (58.5)
125	1,700 (38.5)	1,700 (42.5)	2,990 (49)	2,970 (56.5)
130	1,210 (35.5)	1,210 (38.5)	2,770 (47)	2,770 (54)
135			2,290 (44.5)	2,290 (51.5)
140			1,850 (42)	1,850 (48.5)
145			1,450 (39.5)	1,450 (46)
150			1,070 (36.5)	1,070 (42.5)

NOTE: ( ) Boom angles are in degrees.
*This capacity is based upon maximum boom angle.

40 - 125 ft.
(12 - 38 m)

11,500 lbs.
(5216 kg)

33.25 R29
XRB** Tires
Stationary

360°

Pounds

Feet	40	45	55	65	75	85	95
10	67,850 (70.5)	62,500 (73)					
12	52,750 (67.5)	49,450 (70.5)	47,150 (74.5)				
15	36,700 (62.5)	36,250 (66)	35,050 (71)	29,900 (74.5)	19,150 (77)		
20	22,100 (53.5)	21,850 (58.5)	21,400 (65)	20,950 (69.5)	13,550 (72.5)	13,550 (75)	
25	14,550 (42.5)	14,250 (50)	13,750 (59)	13,100 (64.5)	9,650 (68.5)	9,650 (71.5)	9,650 (74)
30	9,460 (28)	9,470 (40)	9,080 (52)	8,270 (59.5)	6,770 (64)	6,770 (68)	6,770 (70.5)
35		5,600 (26.5)	5,350 (44.5)	4,950 (54)	4,570 (59.5)	4,570 (64)	4,570 (67.5)
40			2,660 (35.5)	2,540 (47.5)	2,520 (55)	2,520 (60)	2,520 (64)
45					1,410 (50)	1,410 (56)	1,410 (60.5)

NOTE: ( ) Boom angles are in degrees.

A6-829-011804B

Boom Angle	40	45
0°	7,450 (32.3)	3,900 (37.8)

NOTE: ( ) Reference radii are in feet.

40 - 125 ft.
(12 - 38 m)

11,500 lbs.
(5216 kg)

33.25 x 29
(32 Ply)
Stationary

Defined Arc
Over Front
±6°

Pounds

Feet	40	45	55	65	75	85	95
10	86,100 (70.5)	72,250 (73)					
12	76,400 (67.5)	61,250 (70.5)	51,600 (74.5)				
15	63,250 (62.5)	49,350 (66)	44,300 (71)	42,950 (74.5)			
20	47,850 (53.5)	36,450 (58.5)	34,700 (65)	33,300 (69.5)	34,300 (72.5)	20,150 (75)	13,950 (77)
25	32,650 (42.5)	28,150 (50)	27,400 (59)	26,150 (64.5)	26,700 (68.5)	20,150 (71.5)	13,950 (74)
30	23,200 (28)	22,400 (40)	21,600 (52)	20,550 (59.5)	20,950 (64)	20,150 (68)	13,950 (70.5)
35		16,850 (26.5)	16,500 (44.5)	16,100 (54)	16,500 (59.5)	16,750 (64)	13,950 (67.5)
40			12,250 (35.5)	11,950 (47.5)	12,550 (55)	13,350 (60)	13,950 (64)
45			9,140 (23.5)	8,870 (41)	9,450 (50)	9,980 (56)	11,050 (60.5)
50				6,510 (32.5)	7,070 (44)	7,790 (51.5)	8,620 (56.5)
60					3,620 (30)	4,400 (41.5)	4,770 (48.5)
70						1,910 (28.5)	2,740 (39.5)

NOTE: ( ) Boom angles are in degrees.

A6-829-012278

Boom Angle	40	45	55	65	75
0°	20,050 (32.3)	14,300 (37.8)	7,750 (47.8)	3,570 (57.8)	1,300 (67.8)

NOTE: ( ) Reference radii are in feet.

Exercise 1- Telescopic Boom

Crane: Grove RT870
Base: Tires 33.25 R29 XRB
Boom: 55 ft
35 ft Extension Stowed
Aux. Head: Yes
Block: 15 ton 1 Sheave, necessary reeving, main boom
Ball: 10 ton below aux. head 15ft
Wire Rope ¾" 1 lb / ft

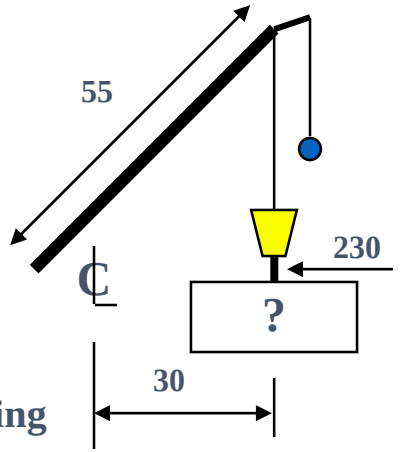

You are going to make a pick and carry with a heavy load using the block. Rigging is 230 lb and the radius is 30 ft. Determine the maximum allowable load weight.

_____ - Total deducts
_____ - Load chart capacity
_____ - Net load @ the hook

_____ - Aux. boom head
_____ - Block
_____ - Ball
_____ - Ball Rope
_____ - Rigging
_____ - 35 ft Lattice Extension

40 - 125 ft.
(12 - 38 m)

11,500 lbs.
(5216 kg)

33.25 x 29
Pick & Carry
Up to 2.5 MPH

Boom Centered
Over Front

Pounds

Feet	40	45	55	65	75	85	95
10	87,650 (70.5)	84,400 (73)					
12	76,500 (67.5)	74,250 (70.5)	69,200 (74.5)				
15	63,700 (62.5)	63,500 (66)	56,400 (71)	52,100 (74.5)			
20	48,850 (53.5)	48,650 (58.5)	43,700 (65)	38,300 (69.5)	38,300 (72.5)	30,100 (75)	21,400 (77)
25	32,650 (42.5)	32,400 (50)	31,900 (59)	30,100 (64.5)	30,100 (68.5)	27,150 (71.5)	21,400 (74)
30	23,200 (28)	22,950 (40)	22,250 (52)	22,100 (59.5)	22,850 (64)	24,000 (68)	21,400 (70.5)
35		16,850 (26.5)	16,500 (44.5)	16,100 (54)	16,750 (59.5)	17,850 (64)	18,900 (67.5)
40			12,250 (35.5)	11,950 (47.5)	12,550 (55)	13,550 (60)	14,500 (64)
45			9,140 (23.5)	8,870 (41)	9,450 (50)	10,350 (56)	11,300 (60.5)
50				6,510 (32.5)	7,070 (44)	7,950 (51.5)	8,840 (56.5)
60					3,650 (30)	4,470 (41.5)	5,290 (48.5)
70						2,180 (28.5)	2,870 (39.5)
80							1,120 (27)

NOTE: ( ) Boom angles are in degrees.

A6-829-012280

Boom Angle	40	45	55	65	75
0°	20,050 (32.3)	14,300 (37.8)	7,750 (47.8)	3,770 (57.8)	1,900 (67.8)

NOTE: ( ) Reference radii are in feet.

Exercise 1- Telescopic Boom

35 ft Boom Extension Stowed	**767 lb**
Aux. Nose	**112**
Block	**420**
Ball	**560**
Ball Rope	**15**
Rigging	**230**
	2,104 lbs =
Total Deducts	

Gross Capacity	**22,250 lbs**
- Total Deducts	**- 2,104**
	20,146 lbs = Maximum Load Weight

Exercise 2 - Telescopic Boom

Crane: Grove RT870
Base: Outriggers Full
Boom: 75 ft
Fixed Tele. Boom Extension: 35-60 ft Stowed
Aux. Head: Yes
Block: 70 ton 6 sheave, w/o cheekplates main boom, 4 parts
Ball: 10 ton, 10 ft below aux. head
Wire rope ¾" 1 lb / ft

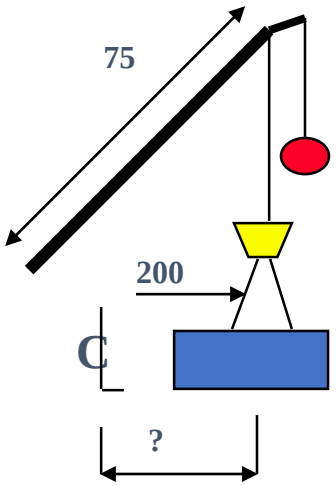

You are going to set a steel cap form on top of a bridge column. You need to know how far away you can pick the form off the ground over the front with the block 25 ft above the ground. Determine maximum radius for the 24,440 lb form plus 200 lb of rigging.

_____ - Form weight
_____ - Rigging
_____ - 35 ft Lattice Extension
_____ - Aux. boom head
_____ - Ball
_____- Ball rope
_____ - Block
_____ - Gross load
_____ - Deduct extra reeving
_____ - Maximum radius
_____ - Net load @ hook

40 - 125 ft.
(12 - 38 m)

11,500 lbs.
(5216 kg)

100%

360°

Pounds

Feet	40	45	55	65	75	85	95	105	115	125
10	140,000 (70)	105,000 (72.5)								
12	111,000 (67)	105,000 (70)	94,600 (74)							
15	91,450 (61.5)	91,000 (65.5)	88,250 (70.5)	71,050 (74)						
20	69,550 (52.5)	69,050 (58)	68,400 (65)	60,400 (69)	55,250 (72.5)	48,150 (75)				
25	55,050 (41.5)	54,600 (49.5)	53,950 (58.5)	53,450 (64.5)	47,950 (68.5)	41,700 (71.5)	38,000 (73.5)	33,350 (75.5)		
30	42,950 (26)	42,450 (39.5)	41,700 (52)	41,200 (59)	41,950 (64)	36,700 (67.5)	33,300 (70.5)	30,750 (72.5)	24,550 (75)	*23,700 (76.5)
35		33,700 (26)	33,000 (44.5)	32,500 (53.5)	33,250 (59.5)	32,600 (64)	29,550 (67)	27,300 (69.5)	21,700 (72)	21,900 (74)
40			26,650 (35.5)	26,150 (47.5)	26,900 (54.5)	27,850 (60)	26,450 (63.5)	24,450 (66.5)	19,350 (69.5)	20,300 (71.5)
45			21,750 (23)	21,300 (40.5)	22,050 (49.5)	23,000 (55.5)	23,700 (60)	22,000 (63.5)	17,450 (66.5)	18,800 (69)
50				17,500 (32.5)	18,250 (44)	19,150 (51.5)	19,900 (56.5)	19,850 (60.5)	15,800 (64)	17,050 (66.5)
60					12,400 (30)	13,250 (41.5)	14,100 (48.5)	14,650 (53.5)	13,250 (58)	14,150 (61.5)
70						9,190 (28.5)	9,910 (39)	10,400 (46)	10,850 (51.5)	11,350 (55.5)
80							6,930 (27)	6,740 (37)	7,850 (44.5)	8,290 (49.5)
90								5,170 (25.5)	5,600 (36)	6,010 (42.5)
100									3,880 (25)	4,250 (34.5)
110										2,840 (24)
Minimum boom angle (deg.) for indicated length (no load)										0
Maximum boom length (ft.) at 0 degree boom angle (no load)										125

NOTE: ( ) Boom angles are in degrees.
*Based on maximum obtainable boom angle.

A6-829-016051

Boom Angle	40	45	55	65	75	85	95	105	115
0°	22,800 (32.3)	18,250 (37.8)	12,200 (47.8)	7,990 (57.8)	5,720 (67.8)	4,320 (77.8)	3,210 (87.8)	2,380 (97.8)	1,570 (107.8)

NOTE: ( ) Reference radii are in feet.

A6-829-012282

Working range

40 - 125 ft.
(12 - 38 m)

35 - 60 ft.
(10.6 - 18.2 m)

11,500 lbs.
(5216 kg)

100%

360°

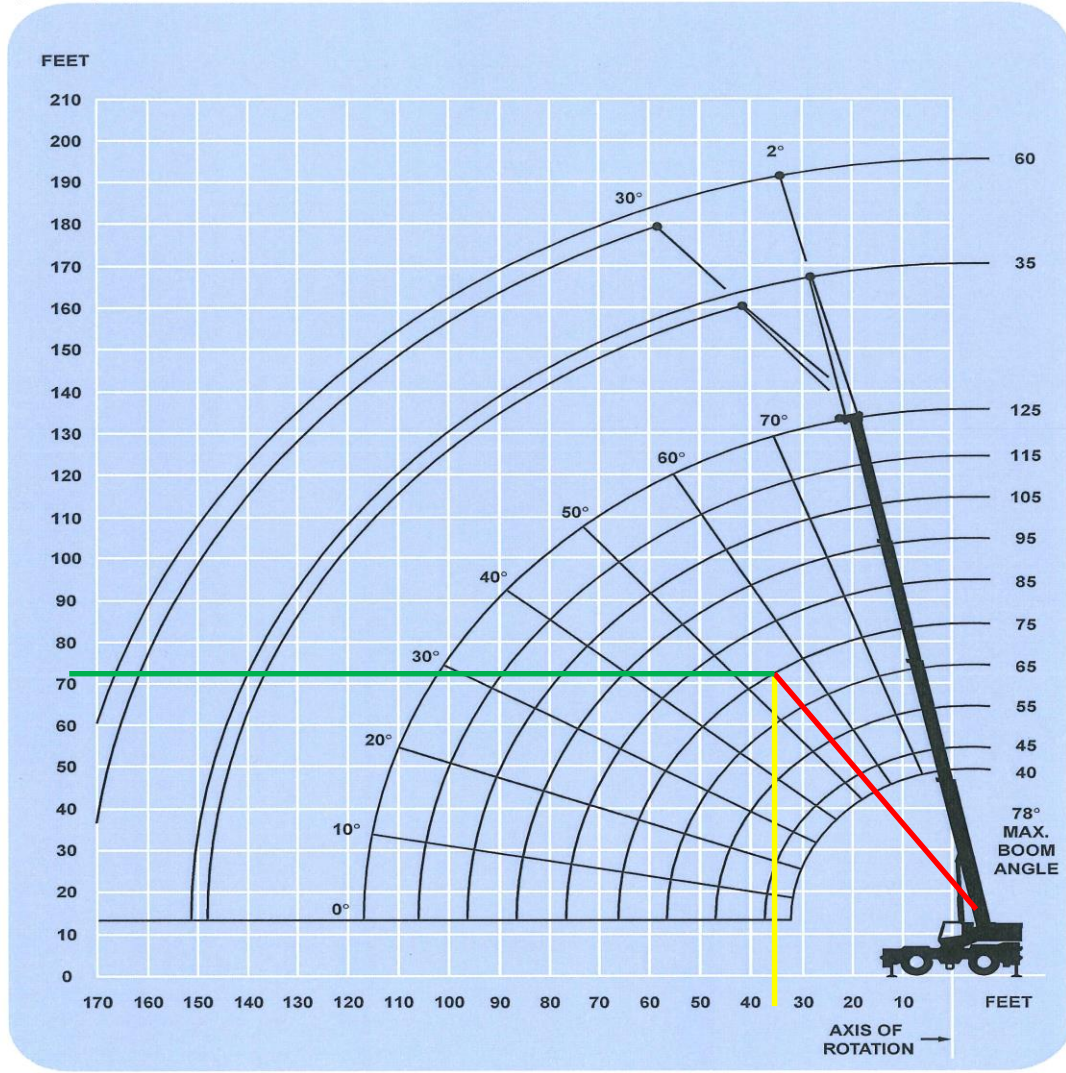

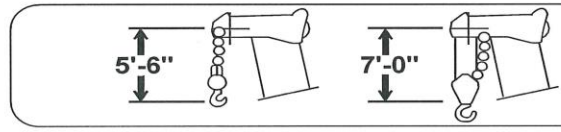

DIMENSIONS ARE FOR LARGEST GROVE FURNISHED HOOK BLOCK AND HEADACHE BALL, WITH ANTI-TWO BLOCK ACTIVATED.

Exercise 2 - Telescopic Boom

Form	**24,440 lb**
Rigging	**200**
35 -60 ft Boom Extension Stowed	**1,033 lb**
Aux. boom Head	**112**
Ball	**560**
Ball Rope	**10**
Block	**1,674**
	28,029 lbs = Gross Load

28,029 lb gross load produces a radius of 35 ft. Now determine tip height and add block rope to verify that 12,920 lb Permissible Line Pull Capacity is not exceeded.

Tip Height	**75 ft**
Initial Height	**- 25**
Fall Length	**50 ft**

Block rope = 1 X 50 = 50 lbs

28,029 lbs	
+ 50 lbs	
28,079 lbs	**Gross Load OK**
	for 35 ft radius =33,250 = 85%

RT870 Outrigger Pad Loads -Always confirm that the lifted load and configuration are approved in the load chart.

Main Boom: 40 ft - 125 ft 4 Section Boom @ 75 ft. length
Stowed Ext.: 35 -60 ft Fixed Length Ext.
Superstructure: Standard Superstructure
Counterweight: Standard Counterweight
Lift Cylinder: Standard Lift Cylinder
Carrier: Standard Carrier
Outriggers: On Outriggers Fully Extended
Hook Load: 28079 lbs. including rigging Radius: 35 ft.

Slew Angle: 0 deg. = Directly Over Rear
10864.24 lbs. Fwd-Lt
8032.71 lbs. Fwd-Rt
56051.44 lbs. Aft-Lt
58776.95 lbs. Aft-Rt

Slew Angle: 43.18 deg. = Over Aft-Lt Outrigger
32501.92 lbs. Fwd-Lt
0.00 lbs. Fwd-Rt
66481.98 lbs. Aft-Lt
34741.45 lbs. Aft-Rt

Slew Angle: 90 deg. = Directly Over Left Side
56254.16 lbs. Fwd-Lt
9797.87 lbs. Fwd-Rt
57522.92 lbs. Aft-Lt
10150.39 lbs. Aft-Rt

Compu-Crane Support
Manitowoc Cranes – Shady Grove
T 1.800.348.0620

Slew Angle: 135.31 deg. = Over Fwd-Lt Outrigger
65555.90 lbs. Fwd-Lt
31985.46 lbs. Fwd-Rt
34316.80 lbs. Aft-Lt
1867.19 lbs. Aft-Rt

Slew Angle: 180 deg. = Directly Over Front
56058.93 lbs. Fwd-Lt
53111.93 lbs. Fwd-Rt
10856.74 lbs. Aft-Lt
13697.74 lbs. Aft-Rt

Slew Angle: 222.27 deg. = Over Fwd-Rt Outrigger
34854.35 lbs. Fwd-Lt
61224.66 lbs. Fwd-Rt
543.29 lbs. Aft-Lt
37103.04 lbs. Aft-Rt

Slew Angle: 270 deg. = Directly Over Right Side
10669.01 lbs. Fwd-Lt
51346.77 lbs. Fwd-Rt
9385.26 lbs. Aft-Lt
62324.30 lbs. Aft-Rt

Slew Angle: 314.31 deg. = Over Aft-Rt Outrigger
1366.73 lbs. Fwd-Lt
29693.83 lbs. Fwd-Rt
32015.49 lbs. Aft-Lt
70649.28 lbs. Aft-Rt

Maximum Outrigger Pad Loads
65555.90 lbs. Fwd-Lt
61224.66 lbs. Fwd-Rt
66481.98 lbs. Aft-Lt
70649.28 lbs. Aft-Rt

All steel fabricated, quick release type outrigger floats, 30.5“ (775 mm) diameter.
Grove Crane -
Maximum outrigger pad load: 101,524 lbs. (46 050 kg).

Exercise 1 – Telescopic Boom

- **Link-Belt RTC-8050**

⚠ WARNING

READ AND UNDERSTAND THE OPERATOR'S AND SAFETY MANUAL AND THE FOLLOWING INSTRUCTIONS AND CHART VALUES BEFORE OPERATING THE CRANE. OPERATION WHICH DOES NOT FOLLOW THESE INSTRUCTIONS MAY RESULT IN AN ACCIDENT.

OPERATING INSTRUCTIONS

GENERAL:

1. Rated lifting capacities in pounds as shown on lift charts pertain to this crane as originally manufactured and normally equipped. Modifications to the crane or use of optional equipment other than that specified can result in a reduction of capacity.
2. Construction equipment can be dangerous if improperly operated or maintained. Operation and maintenance of this crane must be in compliance with the information in the Operator's, Parts and Safety Manuals supplied with this crane. If these manuals are missing, order replacements through the distributor.
3. The operator and other personnel associated with this crane shall read and fully understand the latest applicable American National Standards Institute (ANSI) safety standards for cranes.
4. The maximum allowable lifting capacities are based on crane standing level on firm supporting surface.

SET UP:

1. The crane shall be leveled on a firm supporting surface. Depending on the nature of the supporting surface, it may be necessary to have structural supports under the outrigger pontoons or tires to spread the load to a larger bearing surface.
2. When making lifts on outriggers, all tires must be free of supporting surface. All outrigger beams must be extended to the same length; fully retracted, intermediate, or fully extended.
3. When making lifts on tires, they must be inflated to the recommended pressure. (See Operation note 19 and Tire Inflation.)
4. When operating on tires, do not exceed 76 degree maximum boom angle. Loss of backward stability will occur causing a tipping condition.
5. For required parts of line, see Wire Rope Strength and Winch Performance.

OPERATION:

1. Rated lifting capacities at rated radius shall not be exceeded. Do not tip the crane to determine allowable loads. For concrete bucket operation, weight of bucket and load shall not exceed 80% of rated lifting capacities. For clamshell bucket operation, weight of bucket and bucket contents is restricted to a maximum weight of 7000 pounds or 80% of rated lifting capacity, whichever is less. For magnet operation, weight of magnet and load is restricted to a maximum weight of 7000 pounds or 80% of rated lifting capacity, whichever is less. For clamshell and magnet operation, maximum boom length is restricted to 55 feet and the boom angle is restricted to a minimum of 35 degrees. Lifts with either fly erected or boom in "Mode A" are prohibited for both clam and magnet operation.
2. The crane capacities shown on fully extended, or intermediate extended outriggers do not exceed 85% of the tipping loads. The crane capacities shown on fully retracted outriggers or tires do not exceed 75% of the tipping loads as determined by SAE crane stability test code J–765A.
3. The crane capacities in the shaded areas above the bold lines, are based on structural strength or hydraulic limitations. The crane capacities below the bold lines are based on stability ratings. Some capacities are limited by a maximum obtainable 78° boom angle.
4. Rated lifting capacities include the weight of hook block, slings, bucket, magnet and auxiliary lifting devices. Their weights must be subtracted from the listed rated capacity to obtain the net load which can be lifted. Also, see Capacity Deductions For Auxiliary Load Handling Equipment.
5. Rated lifting capacities are based on freely suspended loads. No attempt shall be made to move a load horizontally on the ground in any direction.
6. Rated lifting capacities are for lift crane service only.
7. Do not operate at any radii or boom lengths (minimum or maximum) where capacities are not listed. At these positions, the crane can overturn without any load on the hook or cause boom failure.

8. The maximum loads which can be telescoped are not definable because of variation in loadings and crane maintenance, but it is permissible to attempt retraction and extension within the limits of the applicable load rating chart.
9. For main boom capacities when either boom length or radius or both are between values listed, proceed as follows:
   a. For boom lengths not listed, use rating for next longer boom length or next shorter boom length, whichever smaller.
   b. For load radii not listed, use rating for next larger radius.
10. The user shall operate at reduced ratings to allow for adverse job conditions, such as: soft or uneven ground, out of level conditions, wind, side loads, pendulum action, jerking or sudden stopping of loads, hazardous conditions, experience of personnel, traveling with loads, electrical wires, etc. Side load on boom or fly is extremely dangerous.
11. When making lifts with auxiliary head machinery, the effective length of the boom increases by 2 feet.
12. Power sections of boom must be extended in accordance with boom mode "A" or "B". In boom mode "B" all power sections must be extended or retracted equally.
13. The least stable rated working area on outriggers is over the side.
14. Rated lifting capacities are based on correct reeving. Deduction must be made for excessive reeving. Any reeving over minimum required (see Wire Rope Strength) is considered excessive and must be accounted for when making lifts. Use working range diagram to estimate the extra feet of rope then deduct 1 lb for each extra foot of wire rope before attempting to lift a load.
15. The loaded boom angle combined with the boom length give only an approximation of the operating radius. The boom angle, before loading, should be greater to account for deflection. For main boom capacities, the loaded boom angle is for reference only. For fly capacities, the load radius is for reference only.
16. For fly capacities with main boom length less than 110 ft and greater that 85 ft, the rated loads are determined by the boom angle using the 110 ft boom and fly chart. For angles not shown use the next lower boom angle to determine the allowable capacity.
17. For fly capacities with main boom length less the 85 ft, the rated loads are determined by the boom angle only using the 85 ft boom and fly chart. For angles not shown, use the next lower boom angle to determine the allowable capacity.
18. The 35.5 ft boom length capacities are based on boom fully retracted. If the boom is not fully retracted, do not exceed capacities shown for the 45 ft boom length.
19. Crane capacities on tires depend on tire capacity, condition of tires, and tire air pressure. On tire picks require lifting from main boom head only on a smooth and level surface. Pick and carry operations are restricted to a maximum speed of 2.5 MPH. The boom must be centered over the front of the crane with two position travel swing lock engaged and the load must be restrained from swinging. Lifts with any fly erected on tires are prohibited. For correct tire pressure, see "Tire Inflation". Also see, Carrier Tire Inflation Label.

DEFINITIONS:

1. Load Radius: Horizontal distance from a projection of the axis of rotation to the supporting surface before loading to the center of the vertical hoist line or tackle with load applied.
2. Loaded Boom Angle: The angle between the boom base section and horizontal after lifting the load at the rated radius.
3. Working Area: Area measured in a circular arc about the center line of rotation as shown on the working area diagram.
4. Freely Suspended Load: Load hanging free with no direct external force applied except by the hoist line.
5. Side Load: Horizontal side force applied to the lifted load either on the ground or in the air.
6. No Load Stability Limit: The stability limit radius is the radius beyond which it is not permitted to position the boom plus load handling equipment. Crane may overturn without any load on the hook.

Boom Mode "A"

Only inner mid section telescopes.

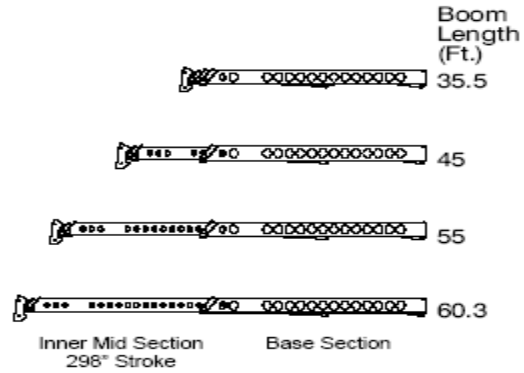

Boom Mode "B"

Inner mid, outer mid and tip sections telescope simultaneously.

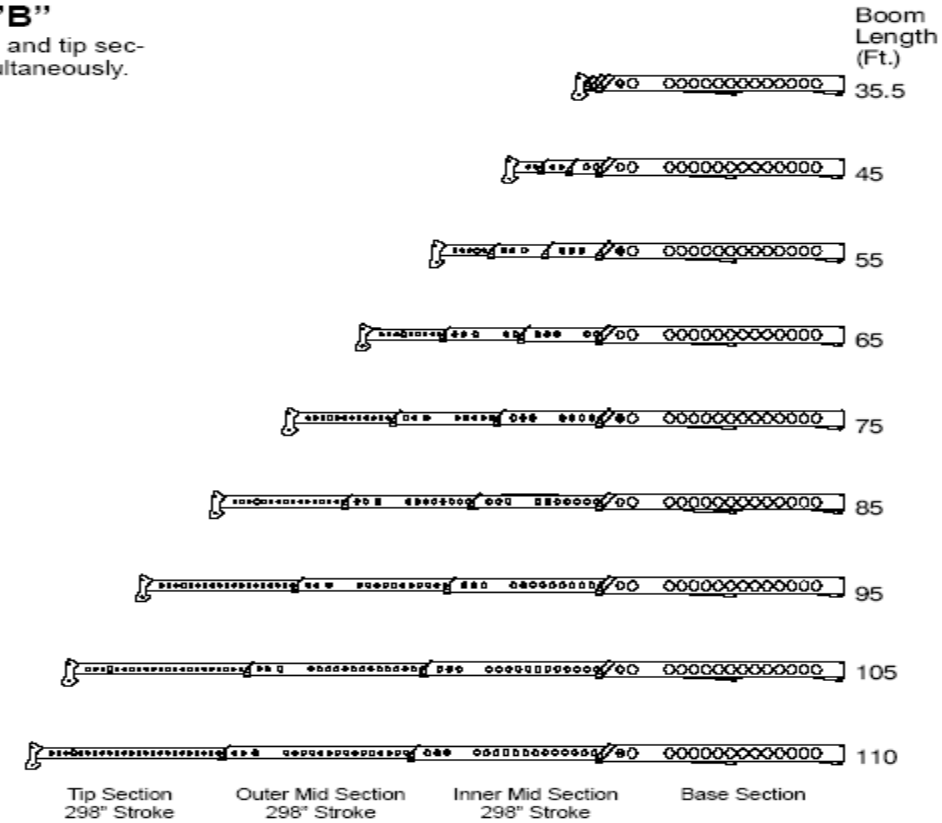

WORKING AREAS

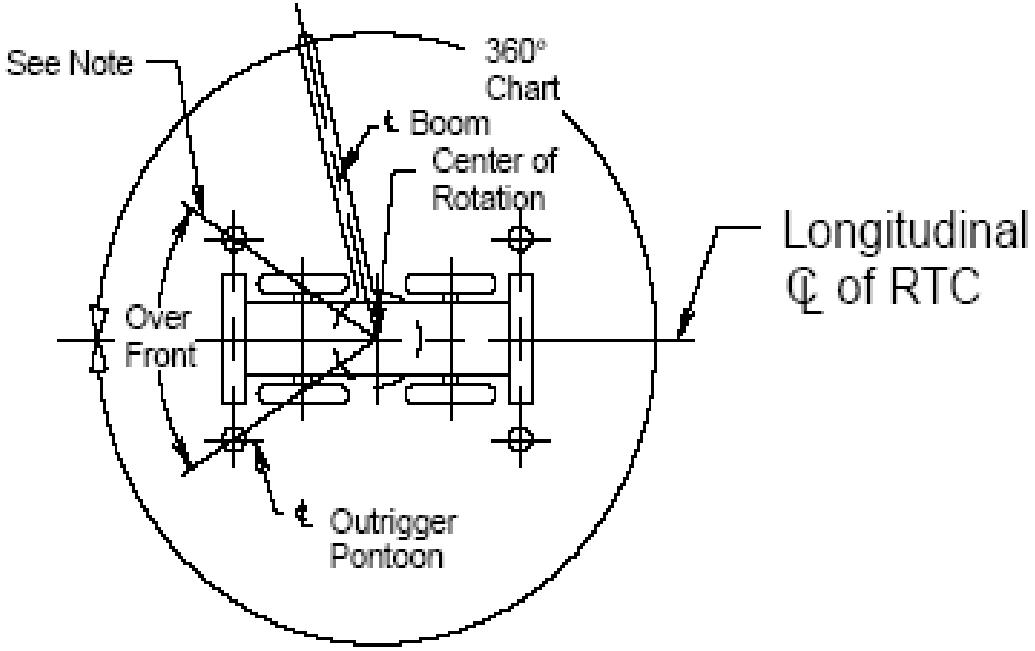

RTC on Outriggers

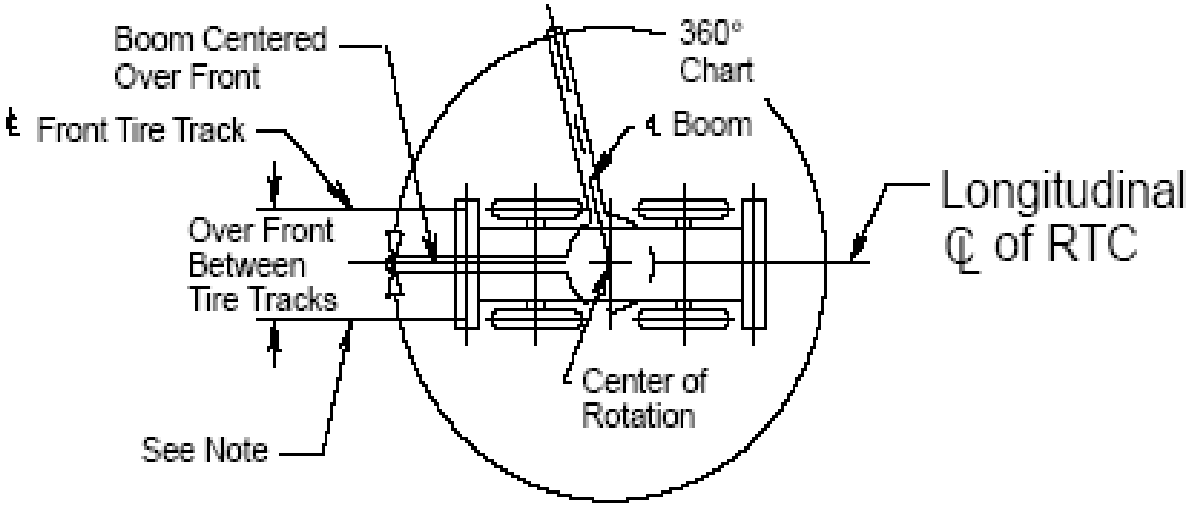

RTC on Tires

Note: These Lines Determine The Limiting Position Of Any Load For Operation Within Working Areas Indicated.

WINCH PERFORMANCE

Winch Line Pulls			Drum Rope Capacity (ft)	
	Two Speed Winch			
Wire Rope Layer	Low Speed	High Speed		
	Available lb	Available lb	Layer	Total
1	16,266*	7,726	102	102
2	14,998*	7,124	111	213
3	13,914*	6,609	120	333
4	12,976*	6,164	128	461
5	12,156	5,774	137	598
6	11,434	5,431	145	743

* Reduce to 12,920 lb if using Type RB Rope.

WIRE ROPE STRENGTH

One part Line

Maximum Lifting Capacities Based On Wire Rope Strength		
Parts of Line	3/4" Type RB	Notes
1*	12,920	Capacities shown are in pounds and working loads must not exceed the ratings on the capacity charts in the Crane Rating Manual.
2	25,840	Study Operator's Manual for wire rope inspection procedures.
3	38,760	*Use of swivel end with 1 part of line is not recommended.
4	51,680	
5	64,600	
6	77,520	
7	90,440	
8	103,360	
9	116,280	
10	129,200	

LBCE	DESCRIPTION
TYPE RB	18 X 19 Rotation Resistant – Extra Improved Plow Steel – Preformed Right Lay – Regular Lay, Swaged

CAPACITY DEDUCTIONS FOR AUXILIARY LOAD HANDLING EQUIPMENT

Load Handling Equipment	Weight (lb)
Auxiliary Head Attached	150
60 Ton Hook Block (See Hook Block For Actual Weight)	1,100
40 Ton Hook Block (See Hook Block For Actual Weight)	720
8.5 Ton Hook Ball (See Hook Ball For Actual Weight)	360
Lifting From Main Boom With:	
22 Ft. Fly Tip Stowed On Boom Base	300
34 Ft. Offset Fly Stowed On Boom Base	900
34 Ft. Offset Fly Erected But Not Used	4,400
56 Ft. Offset Fly Stowed On Boom Base	1,200
56 Ft. Offset Fly Erected But Not Used	7,800
Lifting From 34 Ft. Offset Fly With:	
22 Ft. Fly Tip Stowed On Boom Base	300
22 Ft. Tip Erected But Not Used	**PROHIBITED**
22 Ft. Tip Stowed On 34 Ft. Offset Fly	**PROHIBITED**
Note: Capacity deductions are for Link–Belt supplied equipment only.	

TIRE INFLATION

Tire Size	Operation	Tire Pressure (psi)
29.5 X 25 – 28 PR	2.5 mph	65
	Stationary	75

PONTOON LOADINGS

Maximum Pontoon Load:	Maximum Pontoon Ground Bearing Pressure:
94,000 lb	208 psi

OUTRIGGER SPREAD

Position	Distance
Fully Retracted	108.75" – (9' – .75")
Intermediate Extended	186" – (15' – 6")
Fully Extended	264" – (22' – 0")

AUXILIARY

BOOM HEAD

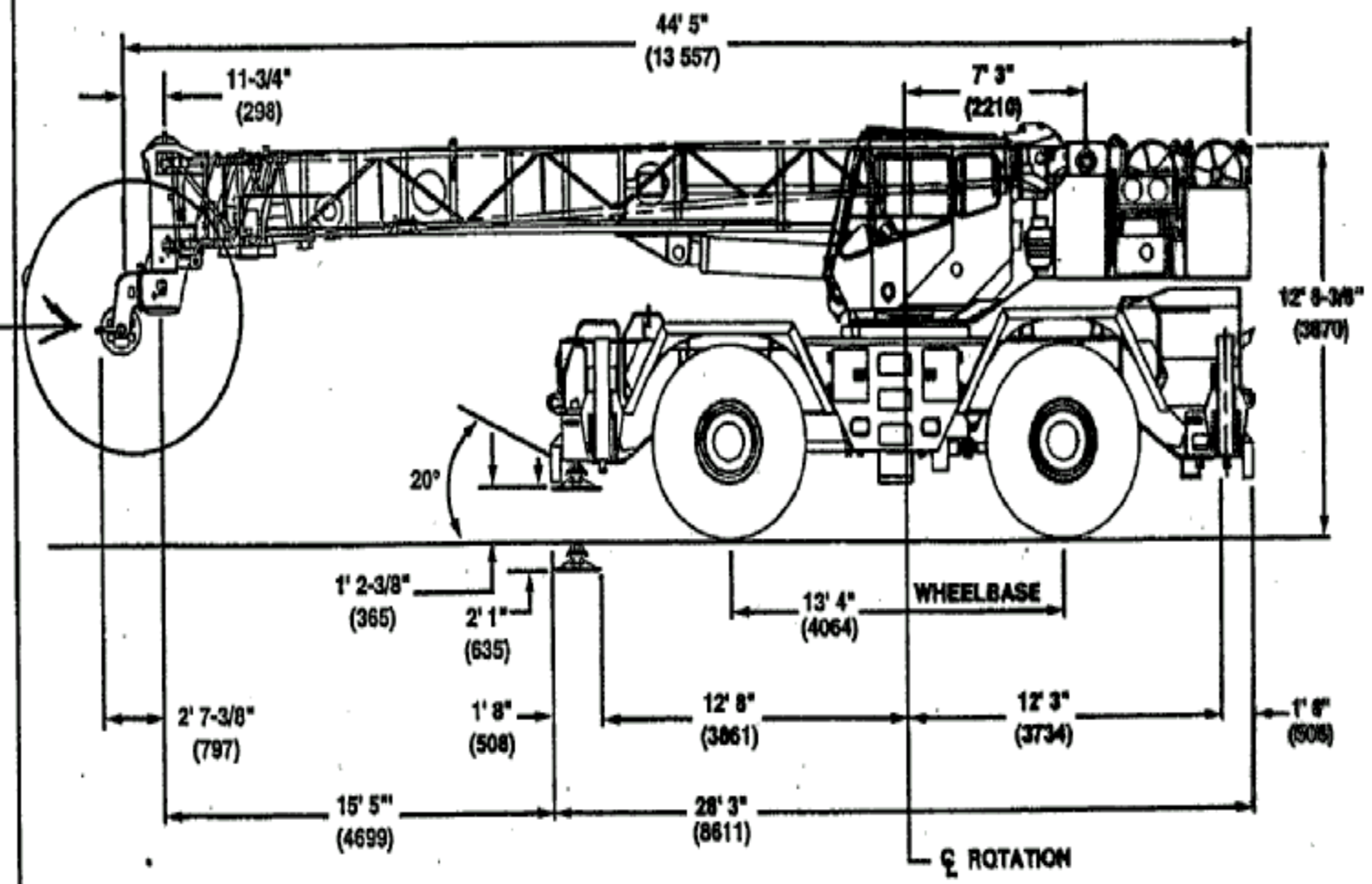

Note: ( ) Reference dimensions in mm

Turning Radius . . . . . 20' 7" (6274 mm)

Front Axle Load . . . . . 48,443 lbs. (21 974 kg)

HYDRAULIC CRANES

STOWED

When jibs or boom extensions not in use are pinned to the base section of the boom.

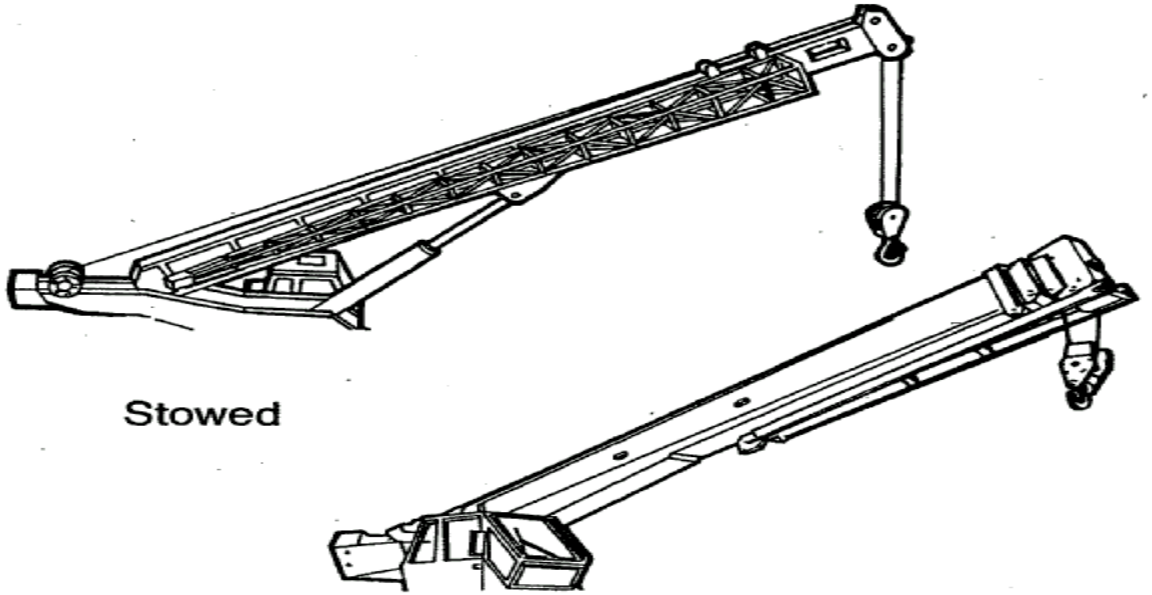

Stowed

STORED

When jibs or boom extensions not in use are carried on the deck of the crane carrier or stored off the crane.

Stored

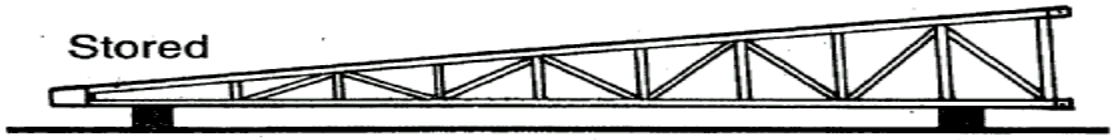

Note:
Definitions above are used in this text but may not be used by others.

LINK-BELT
Serial #
E1164079

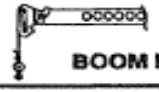

BOOM MODE "B"

Maximum Allowable Lifting Capacities
Rated Lifting Capacities In Pounds
On Fully Extended Outriggers
See Set Up Note 2.

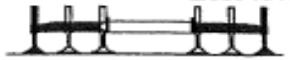

35.5 Ft. To 55 Ft. Main Boom

Load Radius In Feet	35.5 Ft. Loaded Boom Angle (Deg.)	35.5 Ft. 360°	35.5 Ft. Over Front	45 Ft. Loaded Boom Angle (Deg.)	45 Ft. 360°	45 Ft. Over Front	55 Ft. Loaded Boom Angle (Deg.)	55 Ft. 360°	55 Ft. Over Front	Load Radius In Feet
10	68.5	100,000	100,000	73.0	42,000	42,000	76.5	42,000	42,000	10
12	65.0	100,000	100,000	70.5	42,000	42,000	74.5	42,000	42,000	12
15	59.5	90,800	90,800	66.5	42,000	42,000	71.5	42,000	42,000	15
20	49.5	71,400	71,400	59.5	42,000	42,000	66.0	42,000	42,000	20
25	37.5	55,800	56,900	51.5	42,000	42,000	60.0	42,000	42,000	25
30	20.0	38,700	40,500	43.0	39,800	40,500	53.5	40,400	40,500	30
35				32.0	29,800	34,200	46.5	30,400	34,800	35
40				15.5	23,100	26,500	38.5	23,800	27,200	40
45							29.0	19,100	22,000	45
50							14.0	15,600	18,000	50
Min. Boom Angle/ Cap.	0°	20,900	20,900	0°	15,100	15,100	0°	10,900	10,900	Min. Boom Angle/ Cap.

65 Ft. To 85 Ft. Main Boom

Load Radius In Feet	65 Ft. Loaded Boom Angle (Deg.)	65 Ft. 360°	65 Ft. Over Front	75 Ft. Loaded Boom Angle (Deg.)	75 Ft. 360°	75 Ft. Over Front	85 Ft. Loaded Boom Angle (Deg.)	85 Ft. 360°	85 Ft. Over Front	Load Radius In Feet
12	77.0	42,000	42,000							12
15	74.5	42,000	42,000	77.0	42,000	42,000				15
20	70.0	42,000	42,000	73.0	42,000	42,000	75.5	36,000	36,000	20
25	65.5	42,000	42,000	69.0	41,700	41,700	72.0	31,500	31,500	25
30	60.5	40,700	40,500	65.0	37,100	37,100	68.5	28,200	28,200	30
35	55.0	30,700	35,100	60.5	30,900	32,500	64.5	25,400	25,400	35
40	49.0	24,200	27,600	56.0	24,400	27,800	61.0	23,000	23,000	40
45	43.0	19,500	22,300	51.0	19,700	22,600	57.0	19,900	21,100	45
50	35.5	16,000	18,400	46.0	16,300	18,700	52.5	16,400	18,800	50
55	27.0	13,300	15,400	40.0	13,600	15,600	48.0	13,700	15,800	55
60	13.5	11,100	12,900	33.5	11,500	13,200	43.0	11,700	13,400	60
65				25.0	9,700	11,300	38.0	9,900	11,500	65
70				12.5	8,200	9,700	31.5	8,400	9,900	70
75							24.0	7,200	8,500	75
80							12.0	6,100	7,300	80
Min. Boom Angle/ Cap.	0°	8,000	8,000	0°	5,900	5,900	0°	4,300	4,300	Min. Boom Angle/ Cap.

Note: **Refer To Page 8 For "Lifting Capacity Deductions" For Capacity Reductions Caused By Stowed Or Erected Auxiliary Load Handling Equipment.**

Exercise 1 - Telescopic Boom

Crane: Link-Belt RTC-8050
Base: Outriggers Full
Boom: 85 ft Mode B
Fly: 34 ft Stowed
Aux. Head: Yes
Block: 40 ton, main boom, 4 parts
Ball: 8.5 ton, 10 ft below aux. head
Wire rope ¾" 1 lb / ft

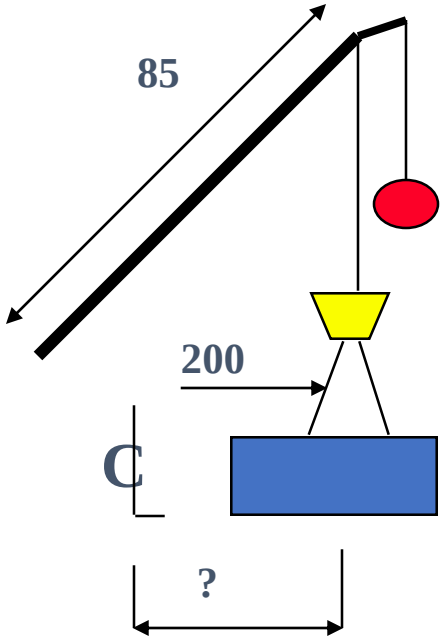

You are going to set a steel cap form on top of a bridge column. You need to know how far away you can pick the form off the ground over the front with the block 25 ft above the ground. Determine maximum radius for the 13,100 lb form plus 200 lb of rigging.

_____ - Form weight
_____ - Rigging
_____ - Fly
_____ - Aux. boom head
_____ - Ball
_____- Ball rope
_____ - Block
_____ - Gross load
_____ - Deduct extra reeving
_____ - Maximum radius
_____ - Net load @ hook

WORKING RANGE DIAGRAM

E1I64079

Working Range Diagram On Fully Retracted Outriggers

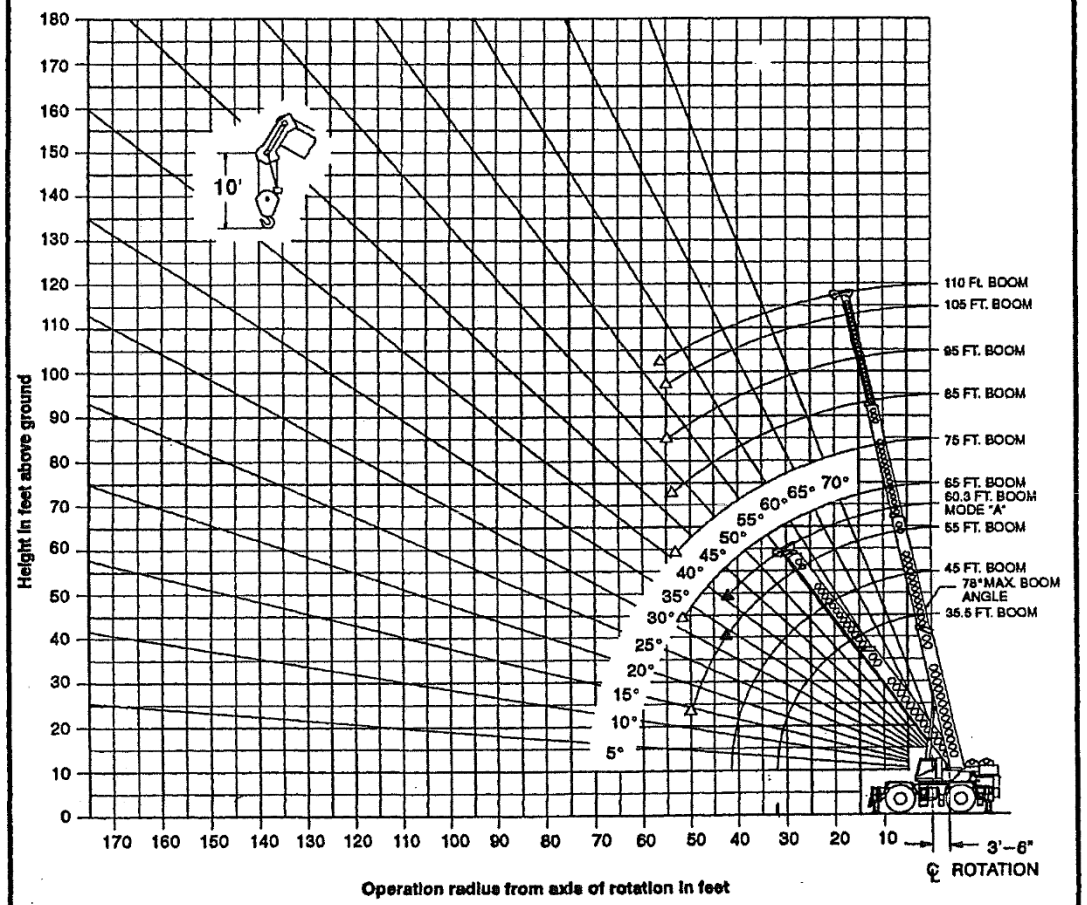

△ Denotes Main Boom–Boom Mode "B"
▲ Denotes Main Boom–Boom Mode "A"

Note: Boom and fly geometry shown are for unloaded condition and crane standing level on firm supporting surface. Boom deflection, subsequent radius and boom angle change must be accounted for when applying load to hook.

⚠ WARNING

Do Not Lower The Boom Below The Minimum Boom Angle For No Load As Shown In The Above Chart For The Boom Lengths Shown. Loss Of Stability Will Occur Causing A Tipping Condition.

WORKING RANGE DIAGRAM

Working Range Diagram On Fully Retracted Outriggers

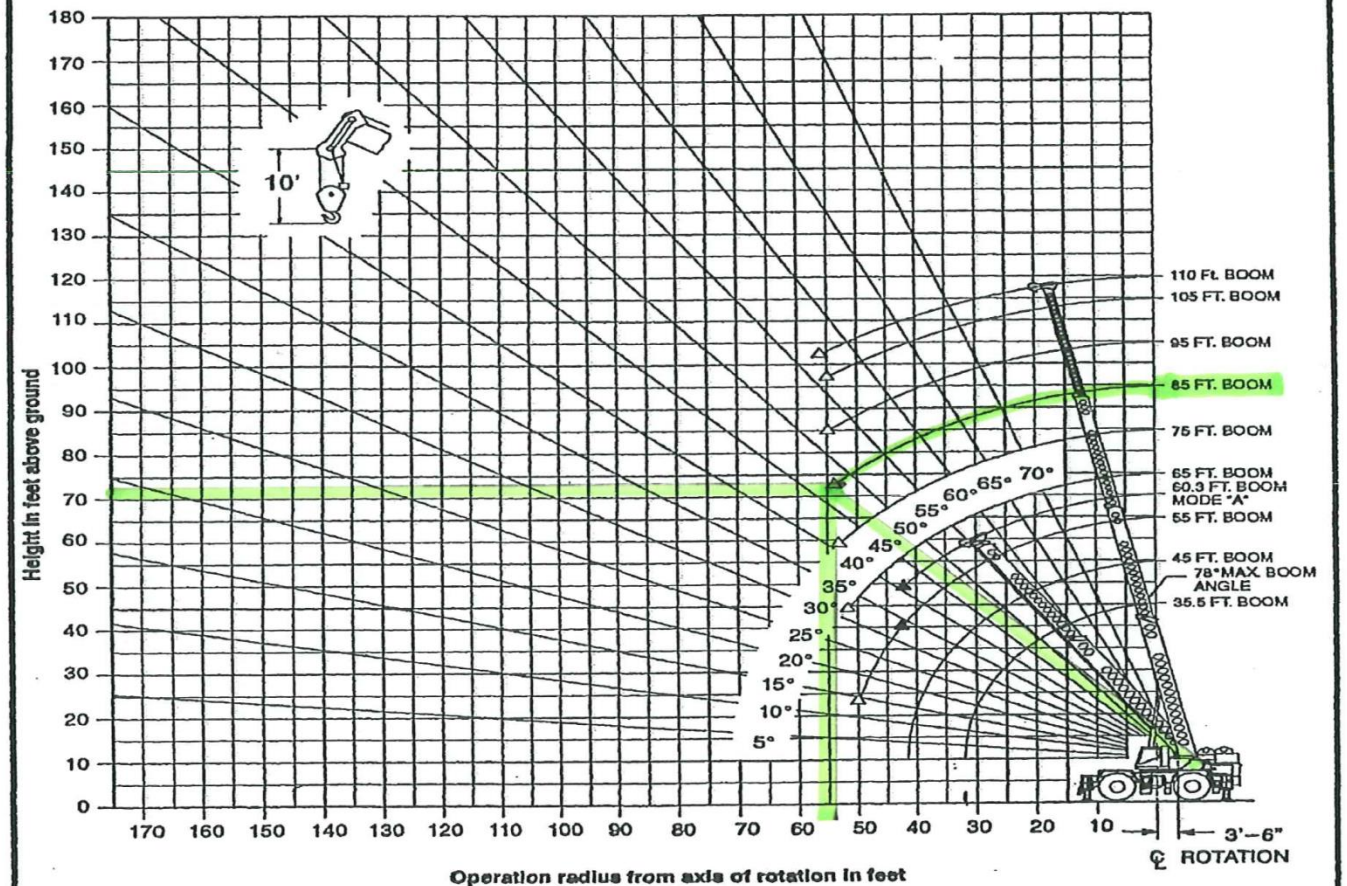

△ Denotes Main Boom–Boom Mode "B"
▲ Denotes Main Boom–Boom Mode "A"

Note: Boom and fly geometry shown are for unloaded condition and crane standing level on firm supporting surface. Boom deflection, subsequent radius and boom angle change must be accounted for when applying load to hook.

⚠ WARNING

Do Not Lower The Boom Below The Minimum Boom Angle For No Load As Shown In The Above Chart For The Boom Lengths Shown. Loss Of Stability Will Occur Causing A Tipping Condition.

Exercise 1 - Telescopic Boom

Form	**13,100 lb**
Rigging	**200**
Fly	**900**
Aux. Head	**150**
Ball	**360**
Ball Rope	**10**
Block	**720**
	15,440 lb = Gross Load

15,440 lb gross load produces a radius of 55 ft. Now determine tip height and add block rope to verify that 15,800 lb capacity is not exceeded.

Tip Height	**72 ft**
Initial Height	**- 25**
Fall Length	**47 ft**

Block rope = 2 X 47 = 94 lb

15,440 lb	
+ 94	
15,534 lb	**Gross Load OK for 55 ft radius**

= 98.3 % Capacity

Link-Belt Constructon Equipment Co., Lexington, Kentucky - RTC-8050 (E1)

Model RTC-8050 (E1) Telescopic Boom with 13,000# CTWT Mode B Boom on Fully Ext. O/R	
15534 lbs load @ **55** ft radius	**85** ft main boom
46.7° boom angle	Pontoon area: **452** in^2
106,168 lbs gross vehicle weight (GVW)	Date: **2/14/03**- v 1.0

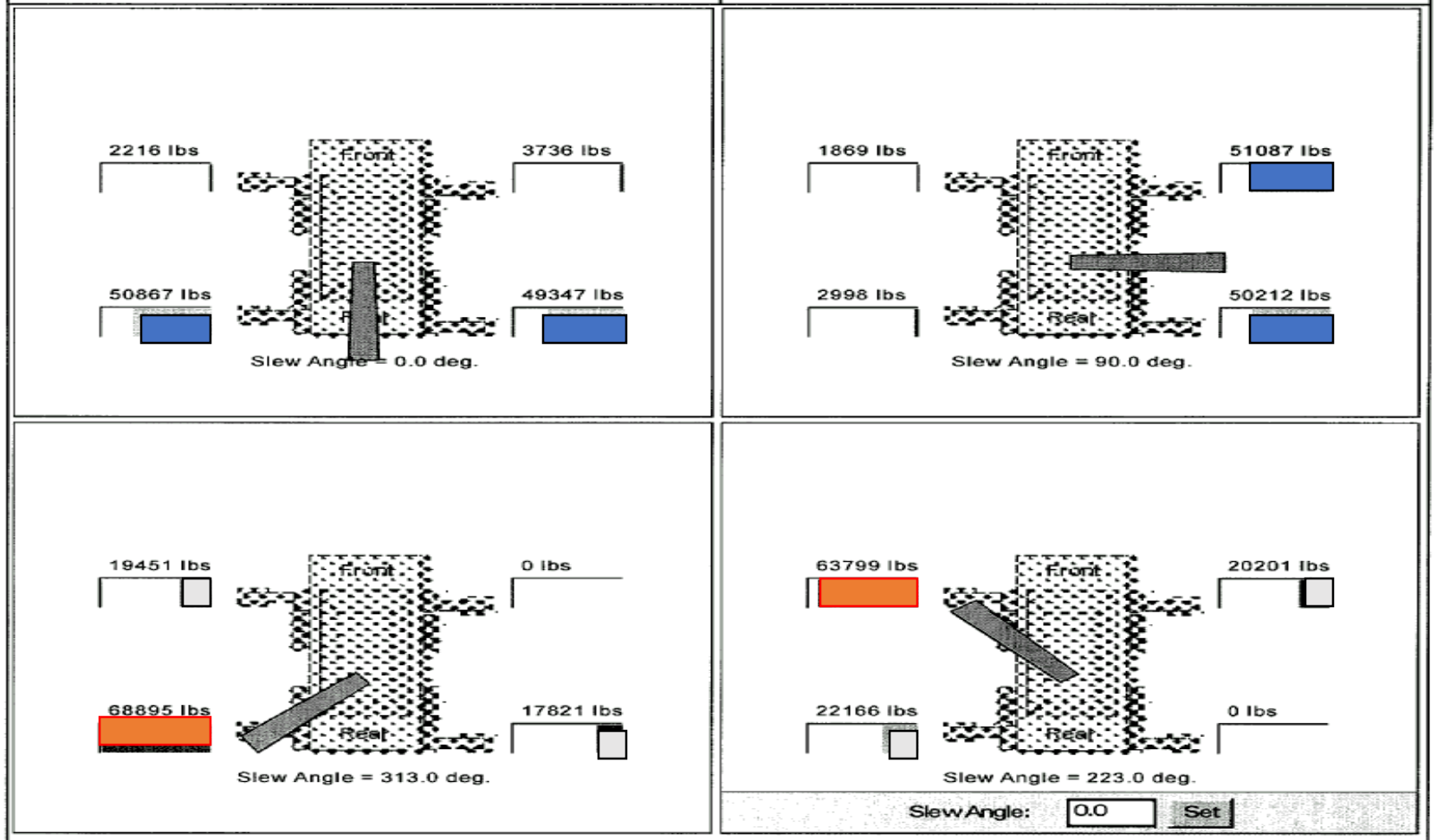

Slew Angle For Maximum O/R Reaction

Click & Drag the Boom or Input Slew Angle

Maximum Outrigger Reaction Over 360°			
Right Front	**Right Rear**	**Left Rear**	**Left Front**
65,880 lbs	66,890 lbs	68,896 lbs	63,875 lbs

CAUTION: DO NOT USE FOR CAPACITIES!

Load Chart Practice Exercise

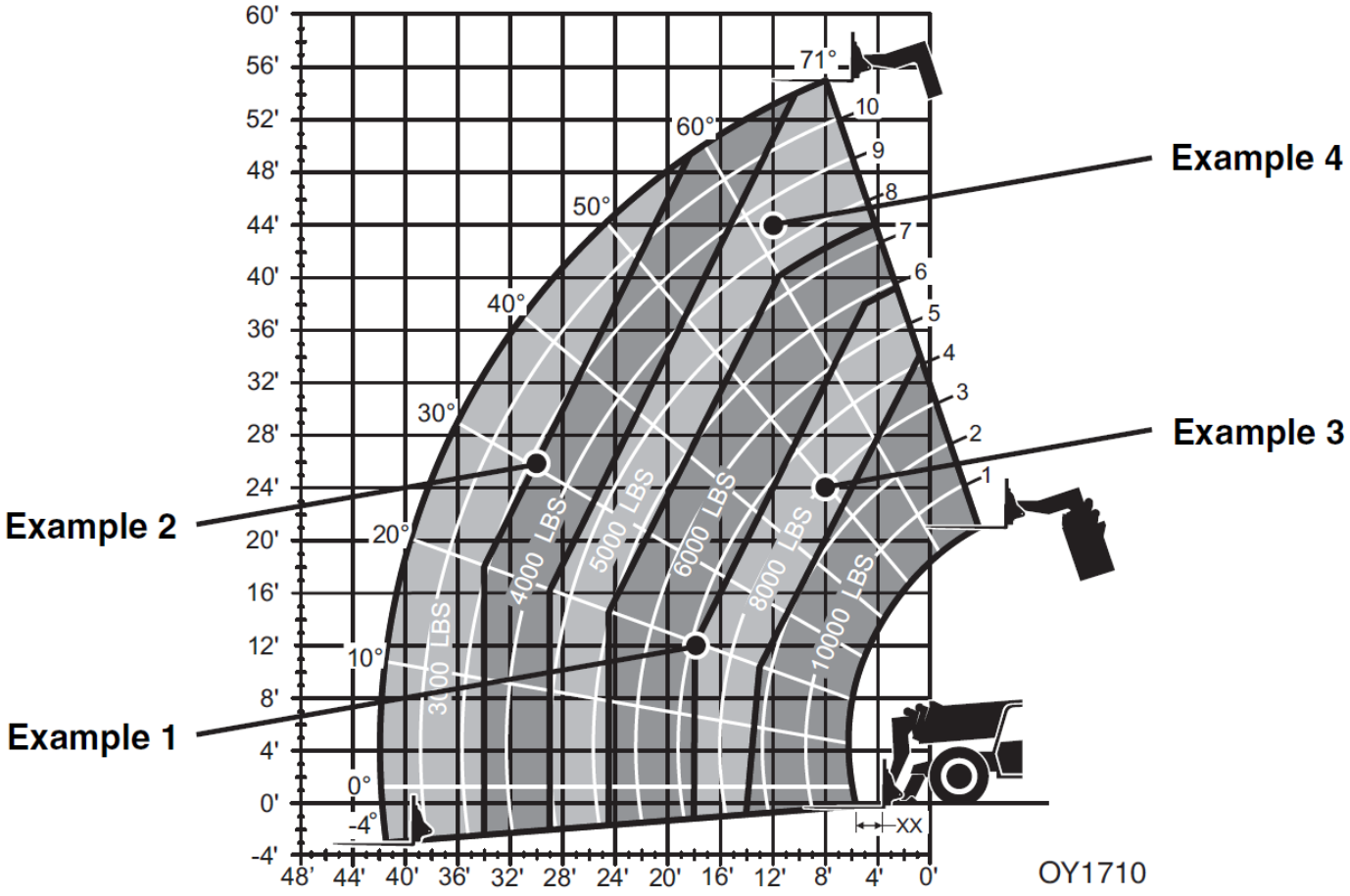

Note: *This is a sample capacity chart* ***only****!* ***DO NOT*** *use this chart, use the one located in your operator cab.*

Load Chart Practice Exercise

	Load Weight	Distance	Height	OK to Lift
1	6000 lb (2722 kg)	18 ft (5,5 m)	12 ft (3,7 m)	
2	4000 lb (1814 kg)	30 ft (9,1 m)	26 ft (7,9 m)	
3	7500 lb (3402 kg)	8 ft (2,4 m)	24 ft (7,3 m)	
4	5750 lb (2608 kg)	12 ft (3,7 m)	44 ft (13,4 m)	

OUTRIGGERS DOWN

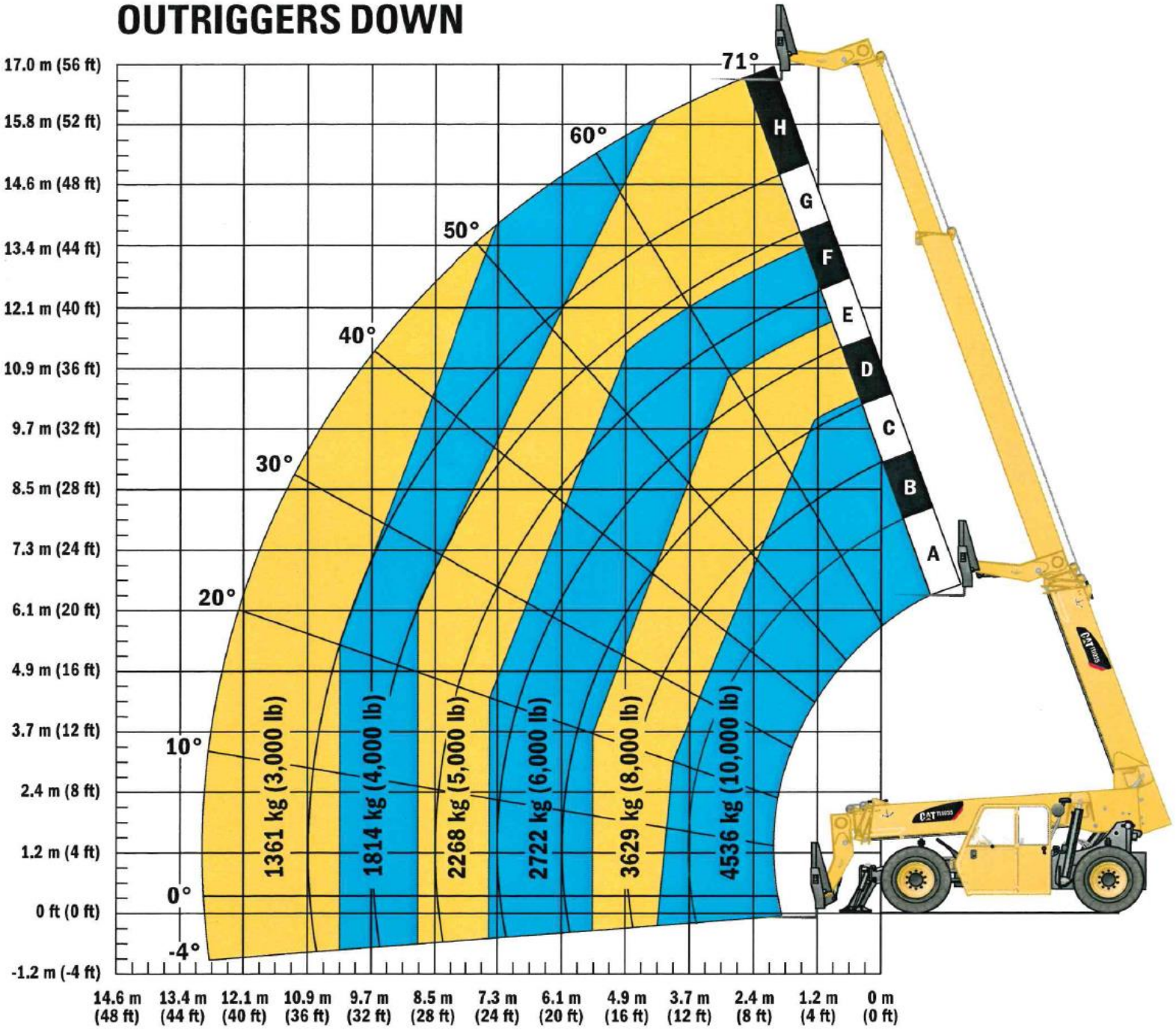

OUTRIGGERS UP

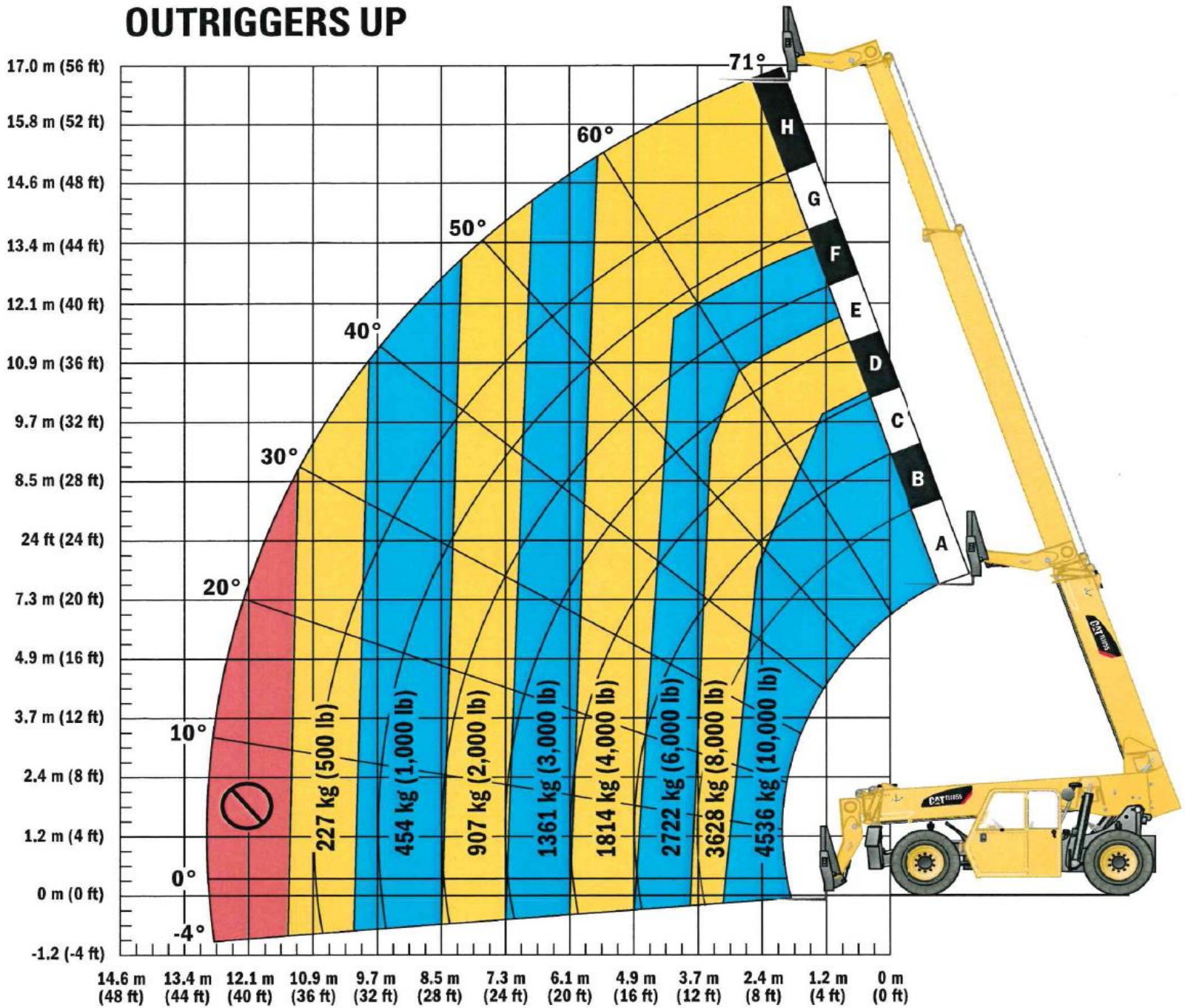

Exercise # 1
CAT TL1055 10,000 lb.'s
24”Load Center

Boom Height _____

Boom Angle _____

Boom Length _____

Maximum Load _____

Exercise # 1
CAT TL1055 10,000 lb.'s
24”Load Center

Boom Height 24 ft

Boom Angle 42º

Boom Length 14 ft

Maximum Load 6,000 lbs

OUTRIGGERS UP

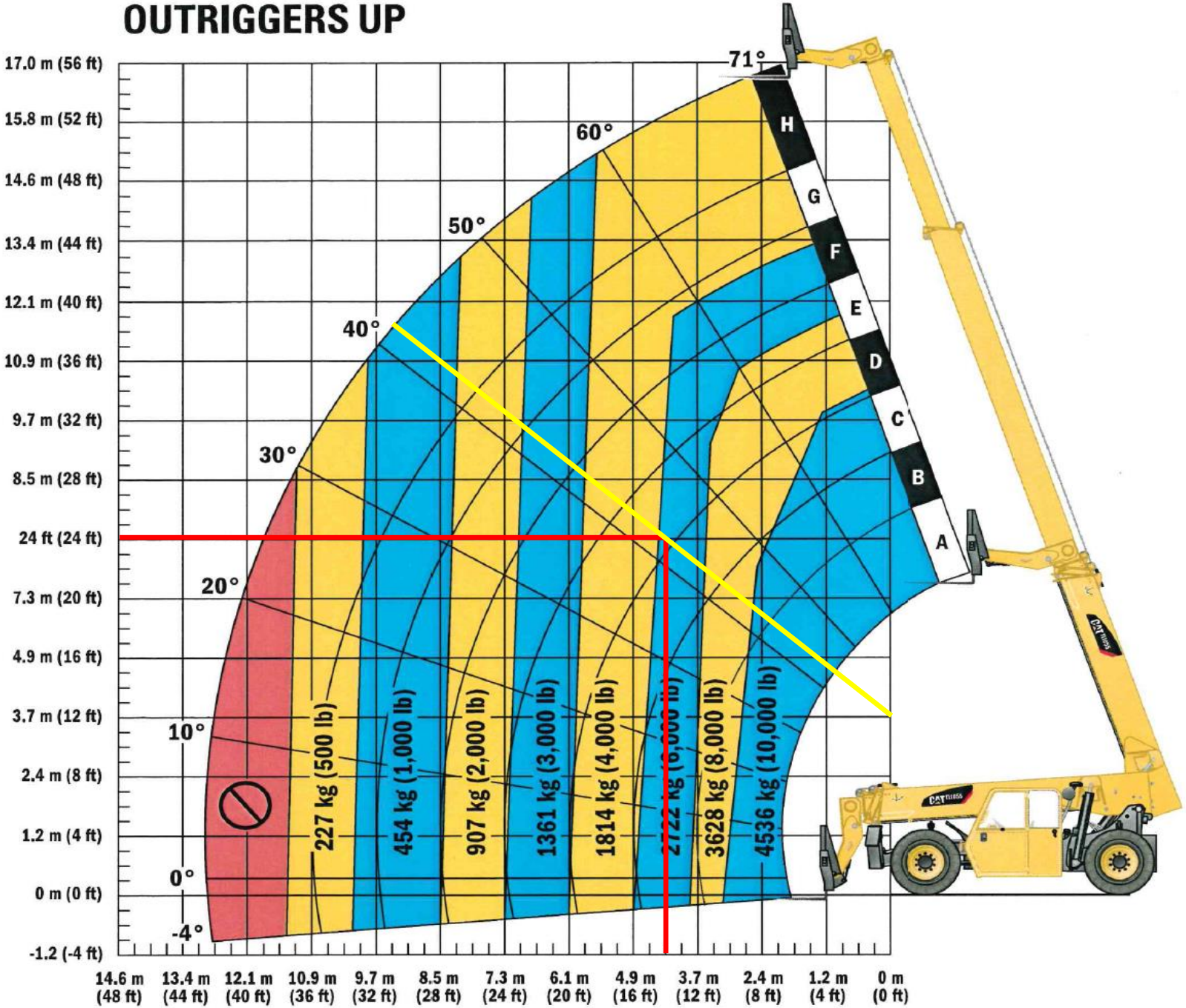

FORKLIFT CAPACITY

FORCE X DISTANCE = FORCE X DISTANCE

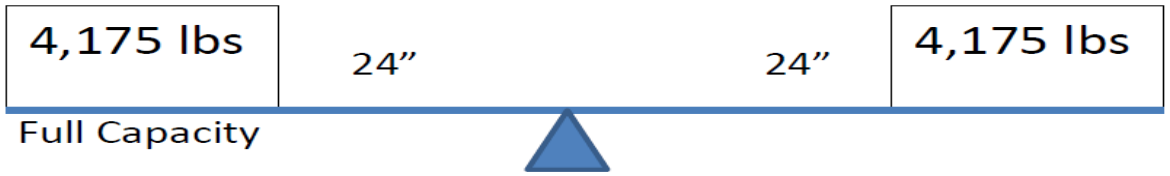

Full Capacity

24(4175)=24.X

X = 4175

Lose 7.7 % Capacity

24(4175)=26.X

X= 3853

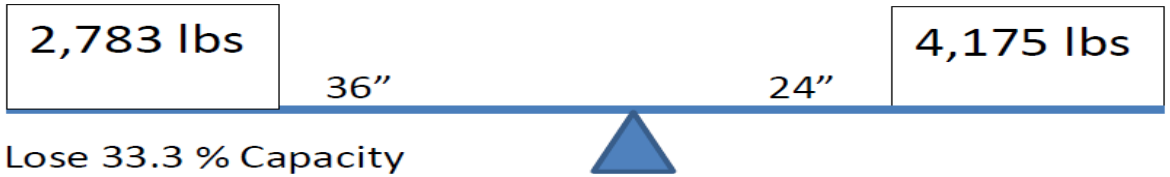

Lose 33.3 % Capacity

24(4175)=36.X

X= 2783

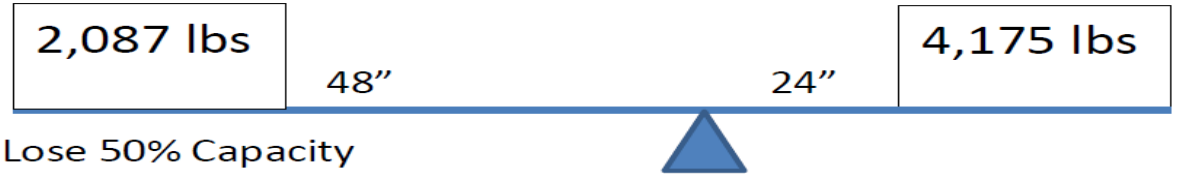

Lose 50% Capacity

24(4175)=48.X

X= 2087

Exercise # 2
CAT TL1055 10,000 lb.'s
30"Load Center

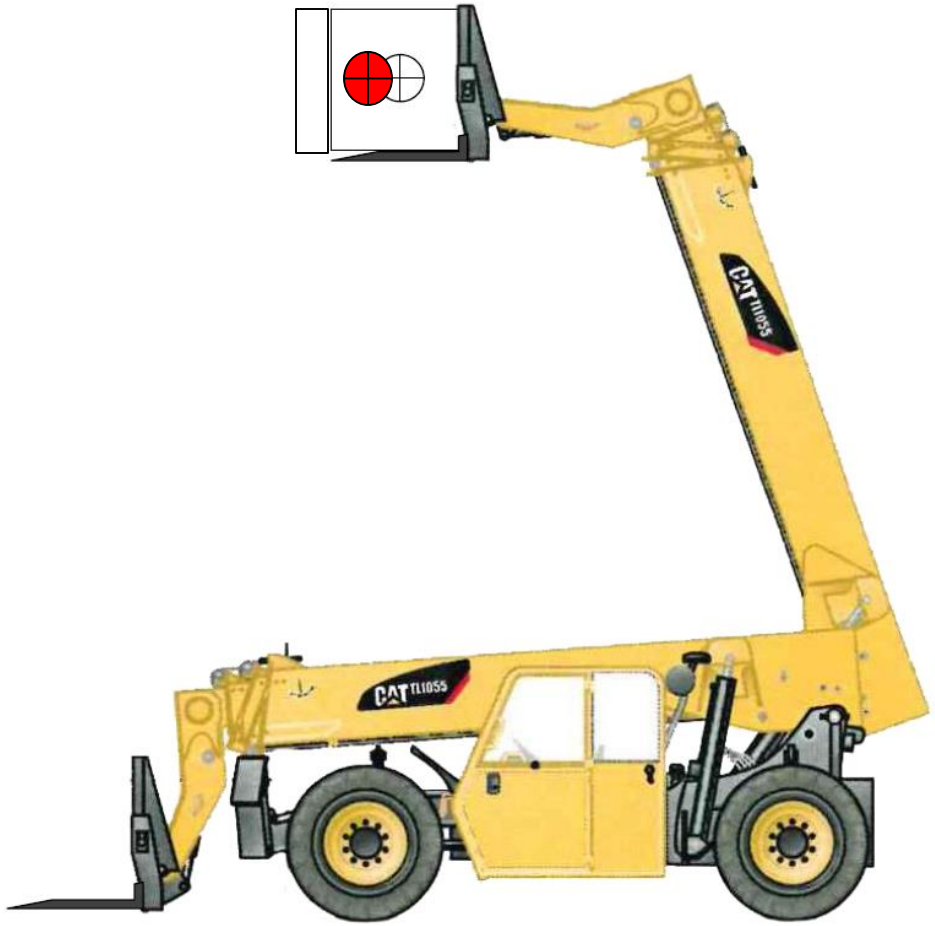

Boom Height _____

Boom Angle _____

Boom Length _____

Maximum Load _____

After Reduction _____

Exercise # 2
CAT TL1055 10,000 lb.'s
30"Load Center

Boom Height 24 ft

Boom Angle 42º

Boom Length 14 ft

Maximum Load 6,000 lbs

After Reduction 4,800 lbs

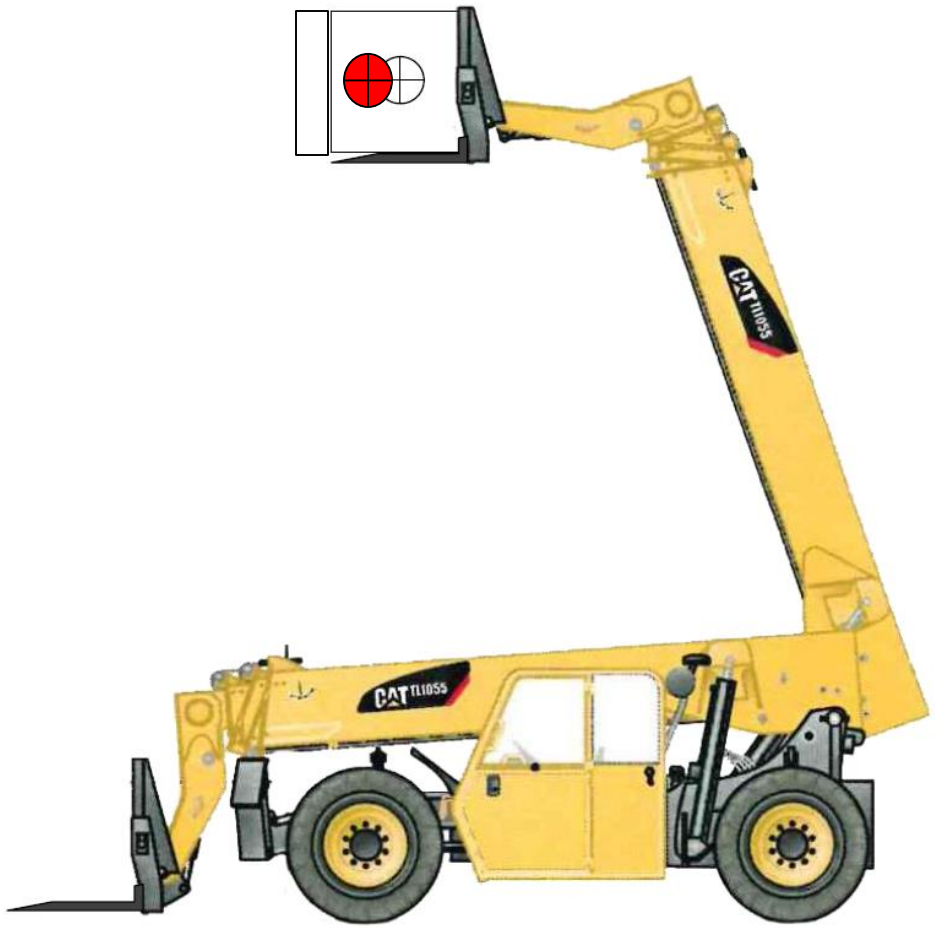

Exercise # 3
CAT TL1055 10,000 lb.'s
36”Load Center

Boom Height _____

Boom Angle _____

Boom Length _____

Maximum Load _____

After Reduction _____

Exercise # 3
CAT TL1055 10,000 lb.'s
36”Load Center

Boom Height 26 ft

Boom Angle 38º

Boom Length 20 ft

Maximum Load 3,000 lbs

After Reduction 2,000 lbs

Exercise # 4
CAT TL1055 10,000 lb.'s
48”Load Center

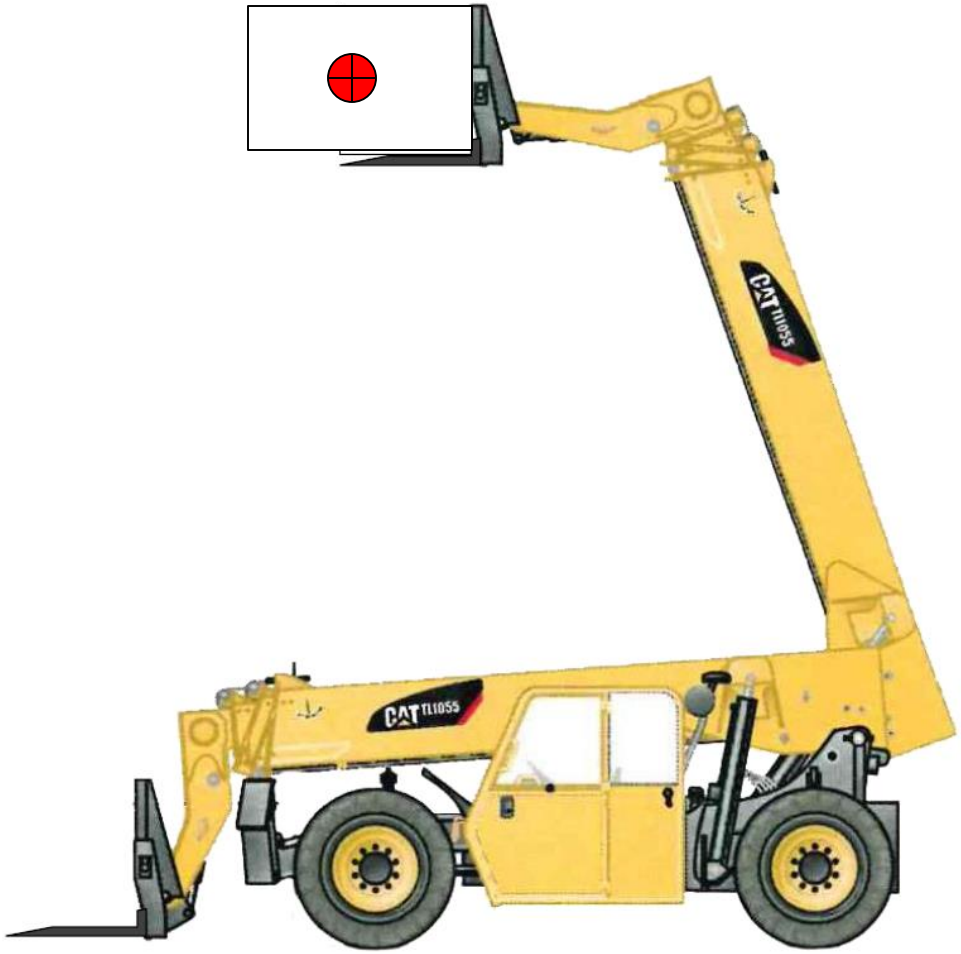

Boom Height _____

Boom Angle _____

Boom Length _____

Maximum Load _____

After Reduction _____

Exercise # 4
CAT TL1055 10,000 lb.'s
48”Load Center

Boom Height 26 ft

Boom Angle 38º

Boom Length 20 ft

Maximum Load 3,000 lbs.

After Reduction 1,500 lbs.

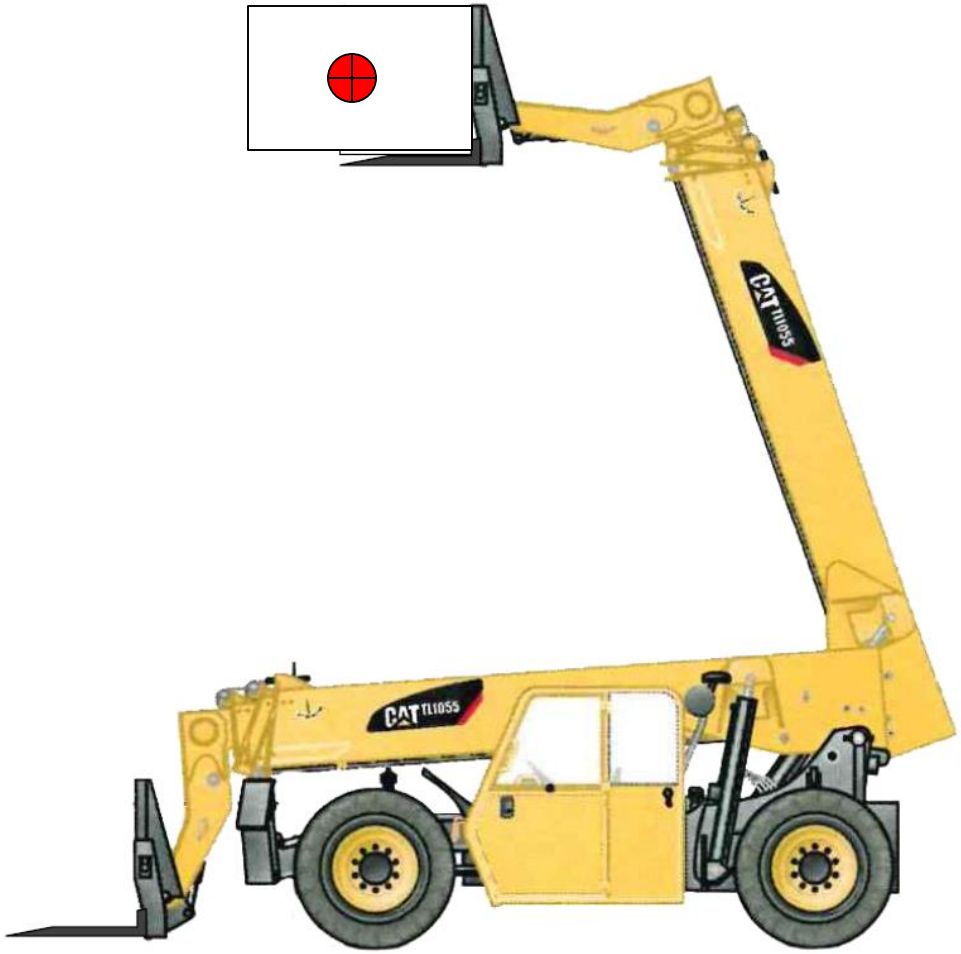

Exercise # 5
CAT TL1055 10,000 lb.'s
48”Load Center Personnel Platform

Boom Height _____

Boom Angle _____

Boom Length _____

Maximum Load _____

After Reduction _____

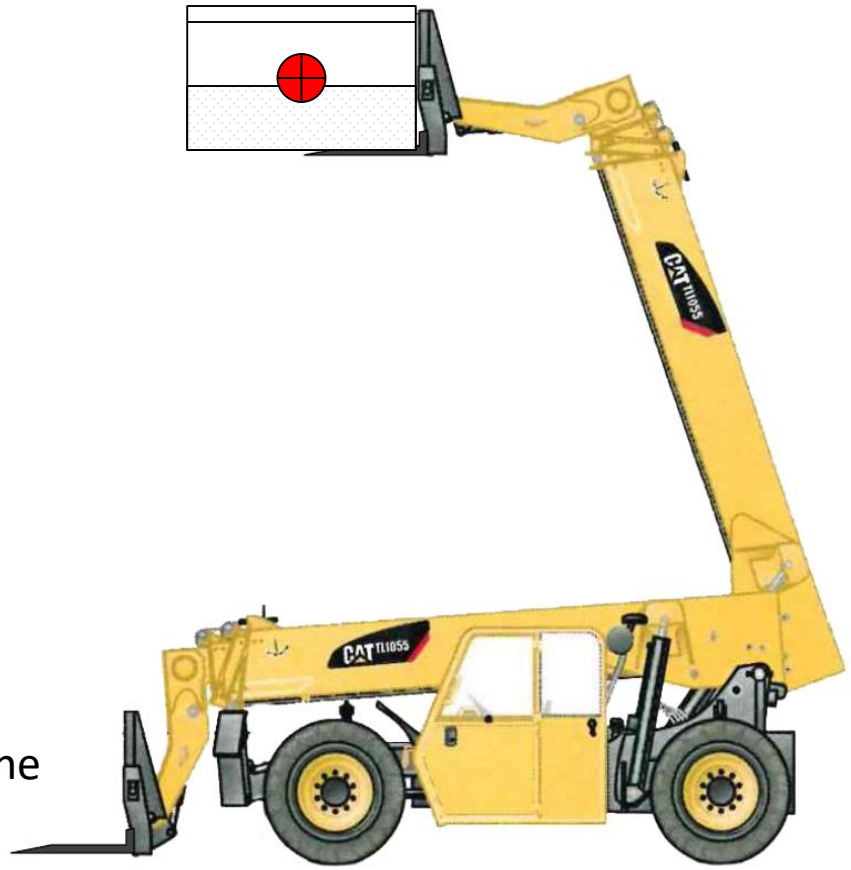

ANSI B56.6 load, and personnel shall not exceed one-third of the capacity at the related load center position as indicated on the information plate(s) of the rough terrain forklift truck on which the platform is used;

Exercise # 5
CAT TL1055 10,000 lb.'s
48”Load Center Personnel Platform

Boom Height 26 ft

Boom Angle 38º

Boom Length 20 ft

Maximum Load 3,000 lbs

After Reduction 1,500 lbs

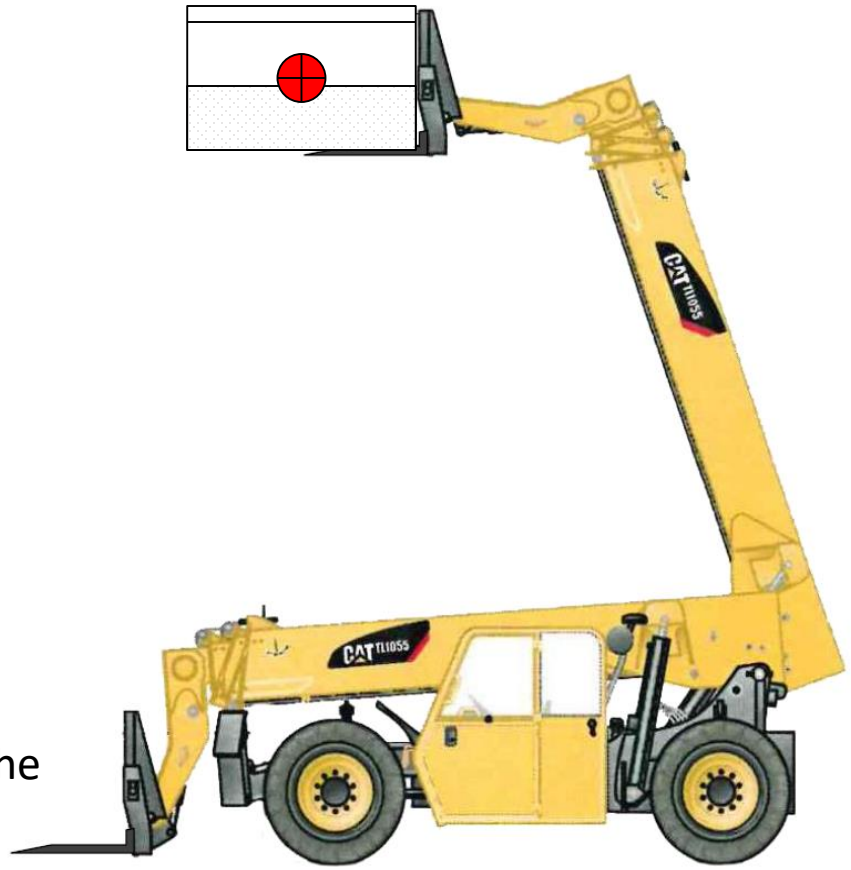

ANSI B56.6 load, and personnel shall not exceed one-third of the capacity at the related load center position as indicated on the information plate(s) of the rough terrain forklift truck on which the platform is used;

500 lb.’s = Platform, Workers & Materials

OUTRIGGERS UP

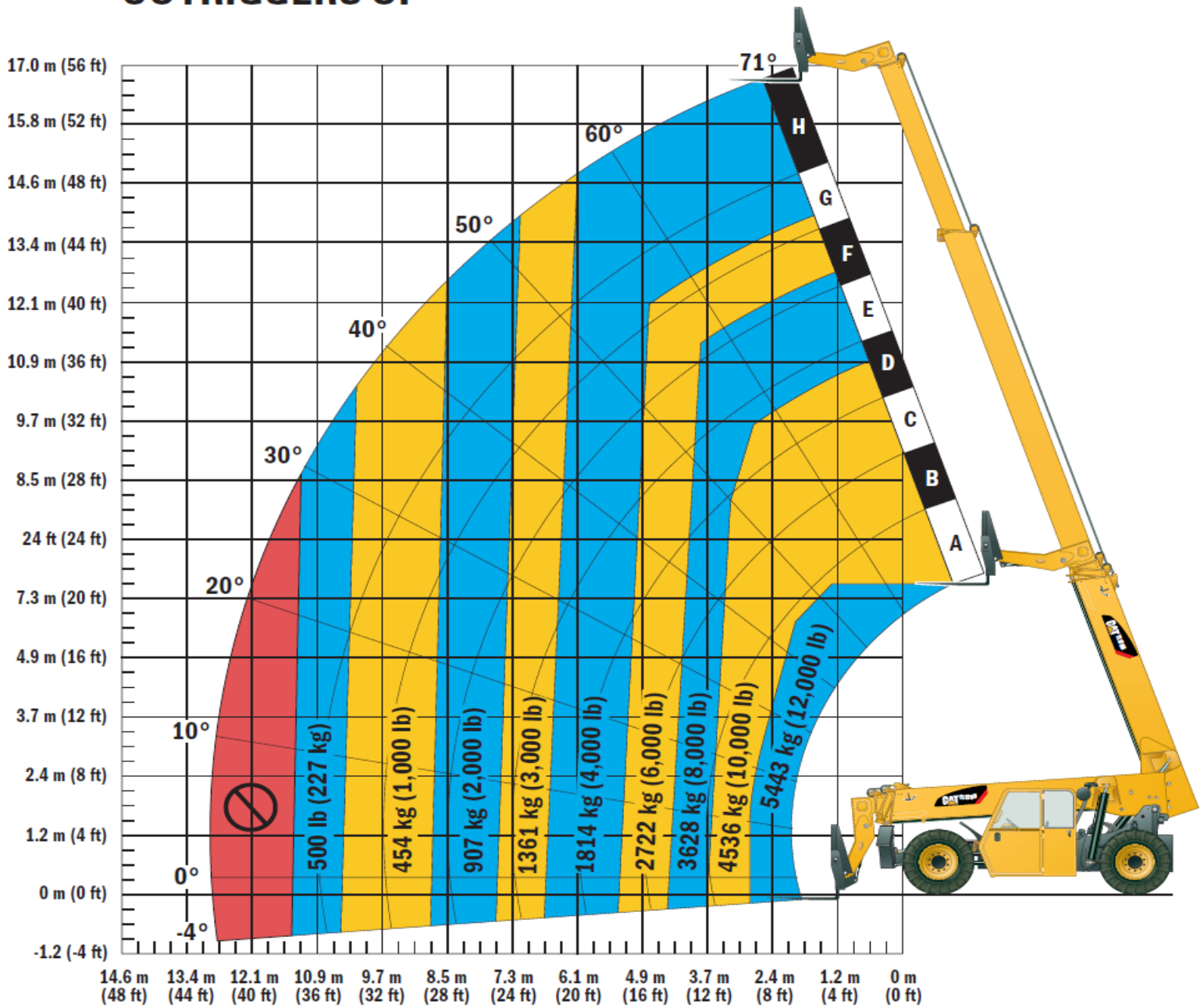

Schadegg Mechanical - Union Depot - AHU-4

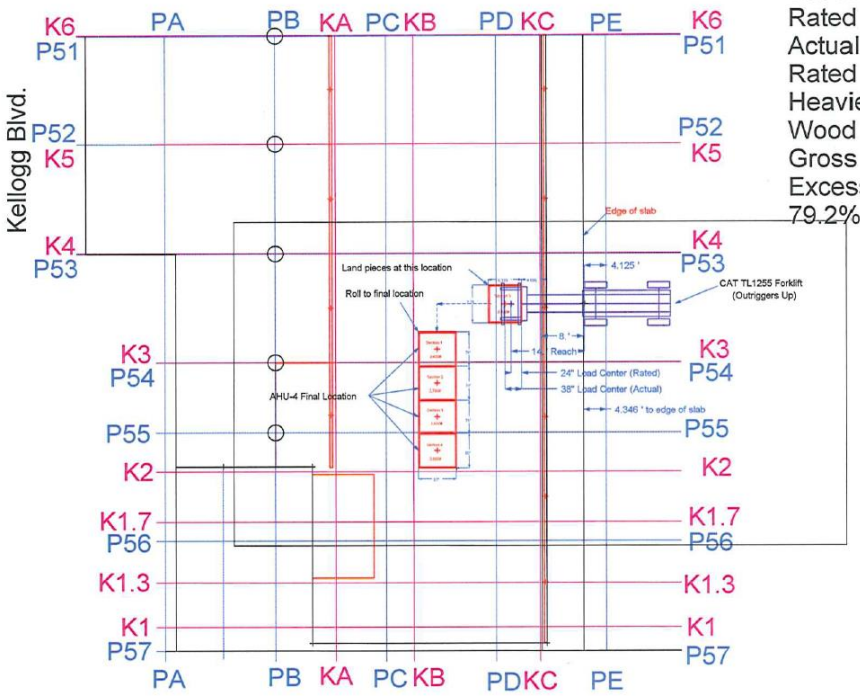

Cat TL1255 Forklift - Outriggers up
Rated Capacity at 14' reach (24 inch load center) - 8,000 lbs.
Actual load center (Section 3) - 38 inches
Rated Capacity with 38 inch load center (8,000 lbs. x 24"/38"): 5,052 lbs.
Heaviest AHU-4 section (Section 3) - 3,800 lbs.
Wood blocking - 200 lbs.
Gross Load - 4,000 lbs.
Excess Capacity - 1,052 lbs.
79.2% of Maximum Capacity

Notes: Set pieces on deck
Schadegg will roll into final position

DRAWING SCALE [ft.]

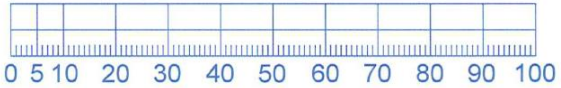

TRUCK CRANE SERVICE 2875 HIGHWAY 55 EAGAN, MN 55121 TELEPHONE: (651) 406-4949 FAXSIMILE: (651) 406-4950	Customer: Schadegg Mechanical	Date Drawn: Revised 12-9-11 12-1-11
	Jobsite: Union Depot Saint Paul, MN	Drawn By: MJT
		Sheet: Plan View

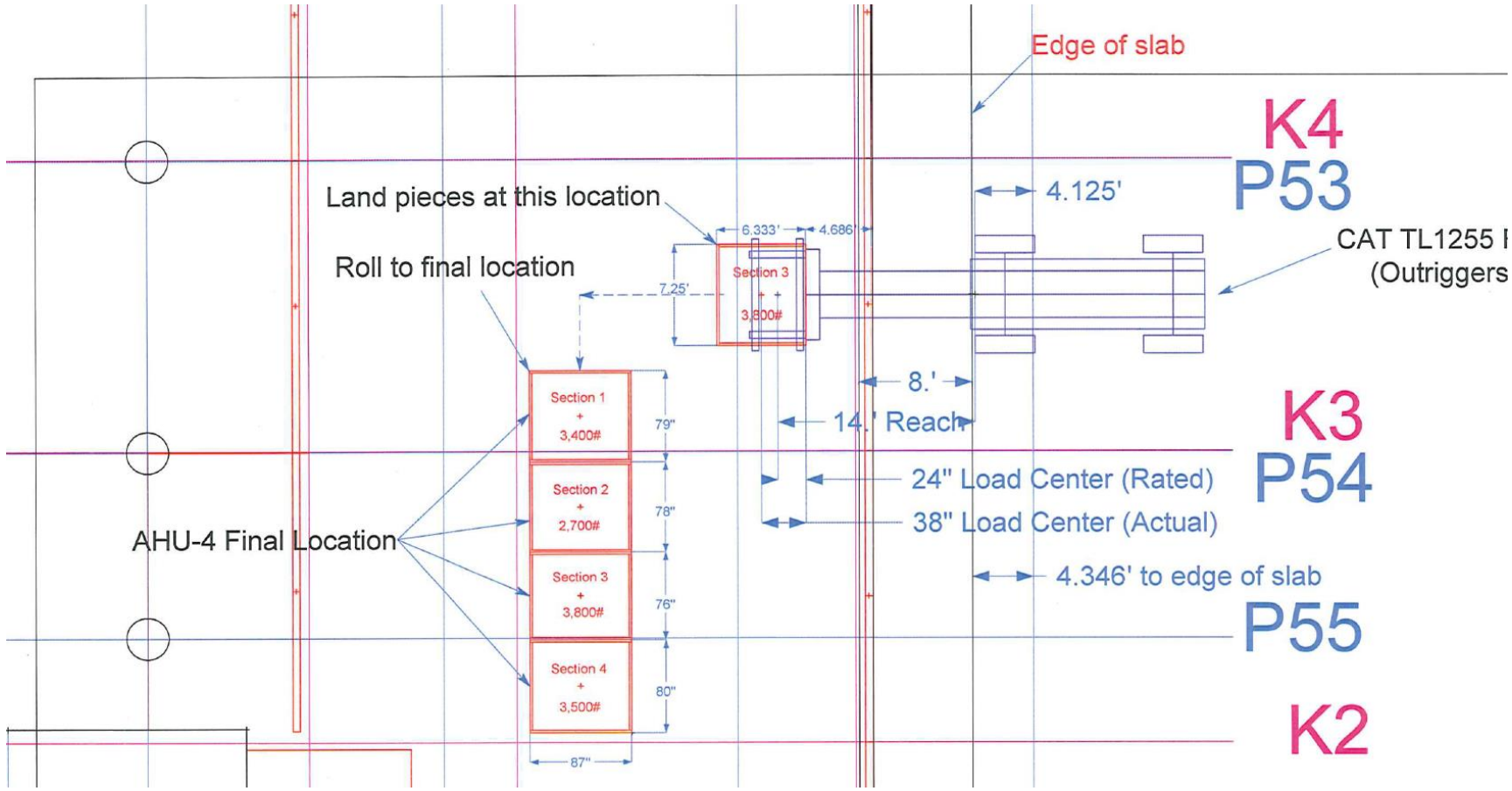
Edge of slab
K4
P53
4.125'
Land pieces at this location
6.333'
4.686'
Roll to final location
7.25'
Section 3
3,800#
CAT TL1255 I
(Outriggers
8.'
14.' Reach
K3
P54
Section 1
+
3,400#
79"
Section 2
+
2,700#
78"
24" Load Center (Rated)
38" Load Center (Actual)
AHU-4 Final Location
Section 3
+
3,800#
76"
4.346' to edge of slab
P55
Section 4
+
3,500#
80"
K2
87"

Schadegg Mechanical - Union Depot - AHU-4

Load Centers & Lift Studies

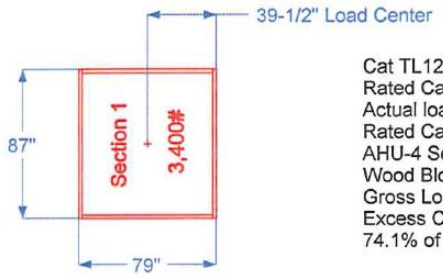

Cat TL1255 Forklift - Outriggers up
Rated Capacity at 14' reach (24 inch load center) - 8,000 lbs.
Actual load center (Section 1) - 39.5 inches
Rated Capacity with 39.5 inch load center (8,000 lbs. x 24"/39.5"): 4,860 lbs.
AHU-4 Section 1 - 3,400 lbs.
Wood Blocking - 200 lbs.
Gross Load - 3,600 lbs.
Excess Capacity - 1,260 lbs.
74.1% of Maximum Capacity

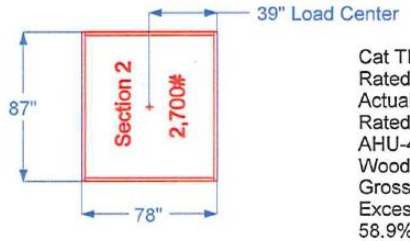

Cat TL1255 Forklift - Outriggers up
Rated Capacity at 14' reach (24 inch load center) - 8,000 lbs.
Actual load center (Section 2) - 39 inches
Rated Capacity with 39 inch load center (8,000 lbs. x 24"/39"): 4,923 lbs.
AHU-4 Section 2 - 2,700 lbs.
Wood Blocking - 200 lbs.
Gross Load - 2,900 lbs.
Excess Capacity - 2,023 lbs.
58.9% of Maximum Capacity

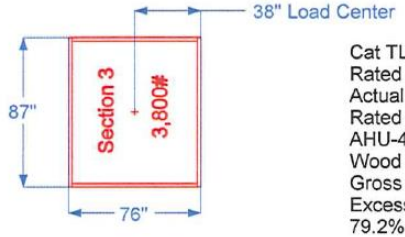

Cat TL1255 Forklift - Outriggers up
Rated Capacity at 14' reach (24 inch load center) - 8,000 lbs.
Actual load center (Section 3) - 38 inches
Rated Capacity with 38 inch load center (8,000 lbs. x 24"/38"): 5,052 lbs.
AHU-4 Section 3 - 3,800 lbs.
Wood Blocking - 200 lbs.
Gross Load - 4,000 lbs.
Excess Capacity - 1,052 lbs.
79.2% of Maximum Capacity

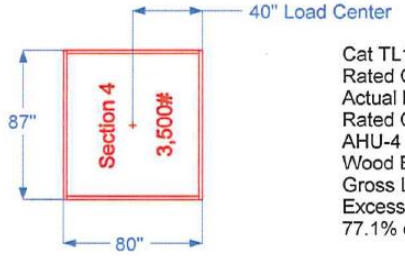

Cat TL1255 Forklift - Outriggers up
Rated Capacity at 14' reach (24 inch load center) - 8,000 lbs.
Actual load center (Section 4) - 40 inches
Rated Capacity with 40 inch load center (8,000 lbs. x 24"/40"): 4,800 lbs.
AHU-4 Section 4 - 3,500 lbs.
Wood Blocking - 200 lbs.
Gross Load - 3,700 lbs.
Excess Capacity - 1,100 lbs.
77.1% of Maximum Capacity

AGCMN Safety & Health Meeting 11.12.15

Industry Topic (Free Rigging & Lifting Hook Attachments on Forklifts)

Industry panel experts included-

- Greg Melius Sr. Manager-Product Support Product Safety and Reliability JLG Industries Inc.
- Mark A. Benishek Technical Director Association of Equipment Manufactures (AEM)
- Jack Kucksdorf Manitou Equipment Group

I obtained more insight on the lifting attachment issue from a couple of consultants I oversee. As I stated in our phone conversation, MNOSHA consultants will instruct employers to follow manufacturer recommendations/requirements for use of devices, such as the lifting device in question. This has been discussed and addressed as an issue w/ employers when it is observed that the device is not used according to manufacturer requirements for proper use – specifically, the use of chains & straps attached to the load bar that are not approved by the manufacturer (see the 2nd and 3rd paragraphs of the JLG document). If there are questions on the manufacturer's requirements for appropriate use that would be something to bring up during your meeting on the 12th.

Hopefully, this will help in clarifying questions regarding the appropriate use of the lifting device.

Dave Ferkul, CIH, CSP
Workplace Safety Consultation Supervisor
218-733-7832
dave.ferkul@state.mn.us

Product Safety & Reliability Department
Telephone: 877-JLG-SAFE
Facsimile: 301-745-3713
E-mail Address: productsafety@jlg.com

Attn: Safety Manager or Service Manager

Subject: JLG Lifting Hook Attachments

Date: March 16, 2010

Per your request, JLG Industries, Inc. submits the following:

You have inquired as to approved attachments for JLG manufactured telehandlers to lift and place a suspended load.

The use of chains and/or straps attached directly to the forks, load bar, carriage or quick attach is not authorized as the quick attach or mast carriage could be damaged due to improper loading and the load could come in contact with or slide off of the forks causing damage or loss of the load.

To lift suspended loads using an existing carriage, JLG Industries, Inc. requires the use of the approved JLG Lifting Hook Attachment, with the following provisions:

- The Lifting Hook's maximum capacity is shown on the serial number plate of the lifting hook.
- The appropriate carriage capacity chart for the telehandler model must be used. Weight of lifting hook and rigging must be included as part of total load being lifted.
- Pallet/lumber forks of an appropriate load rating must be used. Do not use with cubing/block forks.
- Pins are provided on the attachment that must be used to secure the lifting hook behind the heel of each fork. This will help protect against the attachment from being disengaged from the forks.
- Refer to the appropriate Operation and Safety Manual for the telehandler model the lifting hook will be used on. This literature provides information regarding appropriate methods for lifting suspended loads.
- Do not use the lifting hook attachment on 6 ft. masts or 8 ft. towers.
- Do not use the lifting hook attachment with carriages capable of rotating (i.e. side tilt and swing carriages) without disabling the rotation feature(s).

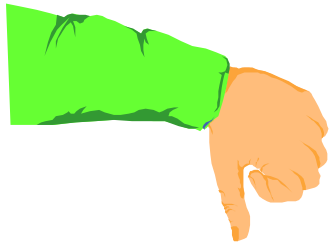

Manufacturers said they would not approve this Modification / Attachment

Free Rigging

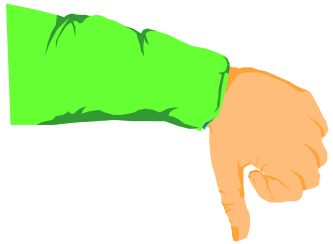

Manufacturers said they would not approve this rigging practice

Standard Interpretations
10/22/1999 –

Forklifts: free rigging requires manufacturer approval.

- Free rigging is the direct attachment to or placement of rigging equipment (slings, shackles, rings, etc.) onto the tines of a powered industrial truck for a below-the-tines lift. This type of lift does not use an approved lifting attachment.
- Although free rigging is a common practice, it could affect the capacity and safe operation of a powered industrial truck. 29 CFR 1910.178(a)(4) requires that "Modifications and additions which affect the capacity and safe operation shall not be performed by the customer or user without manufacturers prior written approval. Capacity, operation, and maintenance instruction plates, tags, or decals shall be changed accordingly." In addition, 1910.178(o)(1) requires that "Only stable or safely arranged loads shall be handled. Caution shall be exercised when handling off-center loads which cannot be centered."
- Employers must seek written approval from powered industrial truck manufacturers when modifications and additions affect the capacity and safe operation of powered industrial trucks. However, if no response or a negative response is received from the manufacturer, OSHA will accept a written approval of the modification/addition from a Qualified Registered Professional Engineer. A Qualified Registered Professional Engineer must perform a safety analysis and address any safety and/or structural issues contained in the manufacturer's negative response prior to granting approval. Machine data plates must be changed accordingly. Of course, the use of an approved attachment to make lifts would be a viable alternative for an employer who does not seek written approval from a manufacturer or a Qualified Registered Professional Engineer.

- July 3, 2002

Mr. Douglas M. Sund
11951 McCrumb Dr.
Northglenn, CO 80233

Dear Mr. Sund:

Thank you for your June 28, 2000 letter to the Occupational Safety and Health Administration's (OSHA's) Directorate of Compliance Programs. This letter constitutes OSHA's interpretation only of the requirements discussed and may not be applicable to any questions not delineated within your original correspondence. You had specific questions regarding clarification of powered industrial truck issues in 29 CFR 1910.178, ***Powered Industrial Trucks***.

Please accept our apology for the delay in responding to your letter. However, as you were advised by telephone and interim letter, our reply required extensive research, and several levels of departmental review.

Question: Are sections (a)(4) and (5) stand alone sections? Should it be interpreted that **prior written approval is required from the manufacturer** to use front-end attachments as well as making any modifications and/or additions to a powered industrial truck.

Reply: A front-end attachment would generally be an "addition" within the meaning of §1910.178(a)(4) that affects capacity and safe operation. Section §1910.178(a)(5) assumes that the truck with the attachments will already be, "marked to identify the attachments and show the approximate weight of the truck and attachment combination at maximum elevation with load laterally centered." Before a non-factory-installed attachment may be used, however, the user must comply both with (a)(4), by obtaining the truck manufacturer's written approval, and with (a)(5), by having the truck appropriately marked.

Please be aware that OSHA would consider the lack of manufacturer's approval to be a ***de minimis*** violation if you had obtained written approval from a qualified Registered Professional Engineer after receiving no response or a negative response from the powered industrial truck manufacturer. If the manufacturer's response was negative then the engineer, prior to granting approval for the modification or addition, would need to perform a safety analysis and address all safety and/or structural issues contained in the manufacturer's disapproval. OSHA might not accept an engineer's written approval if it did not address all of the manufacturer's safety and structural issues.

Thank you for your interest in occupational safety and health. We hope you find this information helpful. OSHA requirements are set by statute, standards and regulations. Our interpretation letters explain these requirements and how they apply toparticular circumstances, but they cannot create additional employer obligations. This letter constitutes OSHA's interpretation of the requirements discussed. Note that our enforcement guidance may be affected by changes to OSHA rules. Also, from time to time we update our guidance in response to new information. To keep apprised of such developments, you can consult OSHA's website at http://www.osha.gov. If you have any further questions, please feel free to contact the [Office of General Industry Enforcement] at (202) 693-1850.

Sincerely, Richard E. Fairfax, Director Directorate of Compliance Programs

- Part Number: 1926
- Part Title: Safety and Health Regulations for Construction
- Subpart: CC
- Subpart Title: Cranes & Derricks in Construction
- Standard Number: 1926.1401
- Title: Definitions.

- ***Multi-purpose machine*** **means a machine that is designed to be configured in various ways, at least one of which allows it to hoist (by means of a winch or hook) and horizontally move a suspended load.**

- **For example, a machine that can rotate and can be configured with removable forks/tongs (for use as a forklift) or with a winch pack, jib (with a hook at the end) or jib used in conjunction with a winch.**

- **When configured with the forks/tongs, it is not covered by this subpart.**

- **When configured with a winch pack, jib (with a hook at the end) or jib used in conjunction with a winch, it is covered by this subpart.**

1926.1400(c)
Exclusions. This subpart does not cover:

1926.1400(c)(8)
Powered industrial trucks (forklifts), except when configured to hoist and lower (by means of a winch or hook) and horizontally move a suspended load.

Boom Head-Mounted Winch

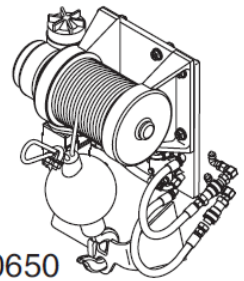

Use Carriage Attachment Load Chart

To determine maximum capacity, refer to *"Telehandler/ Attachment/Fork Capacity"* on page 5-4.

Forklifts

When is construction using a forklift required to comply with the cranes standard?

Equipment that is designed to function as both a crane and a forklift would be considered multi-purpose equipment and covered by the cranes standard when configured to hoist and lower (by means of a winch or hook) and horizontally move a suspended load. However, OSHA intends to propose amendments to the cranes standard which will clarify that forklifts are excluded from coverage by the cranes standard unless they are equipped with a boom/jib and a hoist and used like a crane.

Fork Mounted Hook

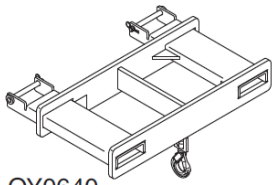

OY0640

Use Appropriate Carriage Attachment Load Chart

To determine maximum capacity, refer to *“Telehandler/ Attachment/Fork Capacity”* on page 5-4.

Coupler Mounted Hook

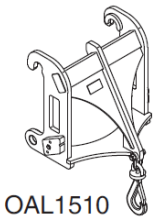

OAL1510

Use Coupler Mounted Hook Load Chart

To determine maximum capacity, refer to *“Telehandler/ Attachment/Fork Capacity”* on page 5-4.

Truss Boom

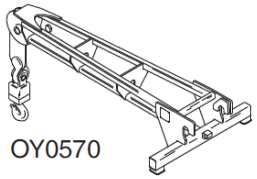

OY0570

Use Truss Boom Load Chart

To determine maximum capacity, refer to *“Telehandler/ Attachment/Fork Capacity”* on page 5-4.

Fork Mounted Hook

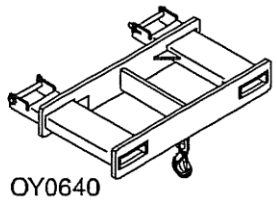

Use Appropriate Carriage Attachment Capacity Chart

To determine maximum capacity, refer to *"Telehandler/ Attachment/Fork Capacity"* on page 5-3.

Suspend loads in accordance with requirements set forth in Section 1 - General Safety Practices.

5.3 JLG SUPPLIED ATTACHMENTS

Note: *Part numbers referenced are for inspection and identification purposes only. Refer to the Parts Manual when ordering replacement parts.*

Attachment	Part Number	Applicable Model	
		TL1055	TL1255
Carriage, 50 in (1270 mm)	301-9757	X	X
Carriage, 72 in (1829 mm)	301-9758	X	X
Side Shift Carriage, 48 in (1220 mm)	314-8479	X	X
Rotate/Side Tilt Carriage, 50 in (1270 mm)	309-4315	X	X
	341-3590		X
Rotate/Side Tilt Carriage, 72 in (1829 mm)	309-4316	X	X
100° Swing Carriage, 72 in (1829 mm)	318-9222	X	X
180° Swing Carriage, 72 in (1829 mm)	341-3591		X
Fork, Pallet 2.36x4x48 in (60x100x1220 mm)	301-9755	X	
Fork, Pallet 2.36x5x48 in (60x125x1220 mm)	301-9753	X	X
Fork, Lumber 2.36x6x60 in (60x150x1539 mm)	301-9754	X	X
Fork, Lumber 1.75x7x60 in (45x180x1539 mm)	301-9756	X	
Fork, Dual Taper 2x6x72 in (50x150x1829 mm)	311-2854	X	X
Fork, Block 2x2x48 in (50x50x1220 mm)	301-9752	X	X
Hook, Fork Mounted	321-0556	X	X
Winch, Boom Head-Mounted	305-3773	X	X
Platform, Fork Mounted (ASME)	314-9439	X	X
	343-9736	X	X
Platform, Fork Mounted (ASME - French)	328-7286	X	X
	343-9738	X	X
Platform, Fork Mounted (ISO)	328-7287	X	X
	343-9737	X	X

Load Falling Hazard

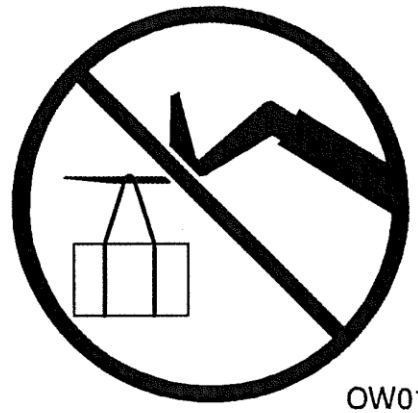

- Never suspend load from forks or other parts of carriage weldment. Use only JLG approved lift points.
- **DO NOT** burn or drill holes in fork(s).
- Forks must be centered under load and spaced apart as far as possible.

Suspended Load

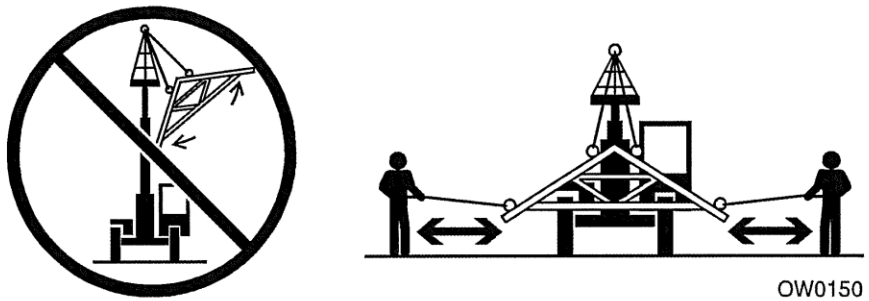

- Tether suspended loads to restrict movement.
- Weight of all rigging (slings, etc.) must be included as part of load.
- Beware of wind. Wind can cause a suspended load to swing and cause dangerous side loads - even with tag lines.
- **DO NOT** attempt to use telehandler frame-leveling to compensate for load swing.
- Keep heavy part of load closest to attachment.
- Never drag the load; lift vertically.

  When driving with a suspended load:
  - Start, travel, turn and stop slowly to prevent load from swinging.
  - **DO NOT** extend boom.
  - **DO NOT** raise the load more than 11.8 in (300 mm) above ground surface or the boom more than 45°.
  - **DO NOT** exceed walking speed.

Product Safety & Reliability Department
Telephone: 877-JLG-SAFE
Facsimile: 301-745-3713
E-mail Address: productsafety@jlg.com

JLG
An Oshkosh Corporation Company

Attn: Safety Manager or Service Manager
Subject: Lifting Hook Attachments

Per your request, JLG Industries, Inc. submits the following:

You have requested approval to utilize a non-JLG supplied fork mounted lifting hook attachment similar to what is shown in Figure #1 on a JLG telehandler.

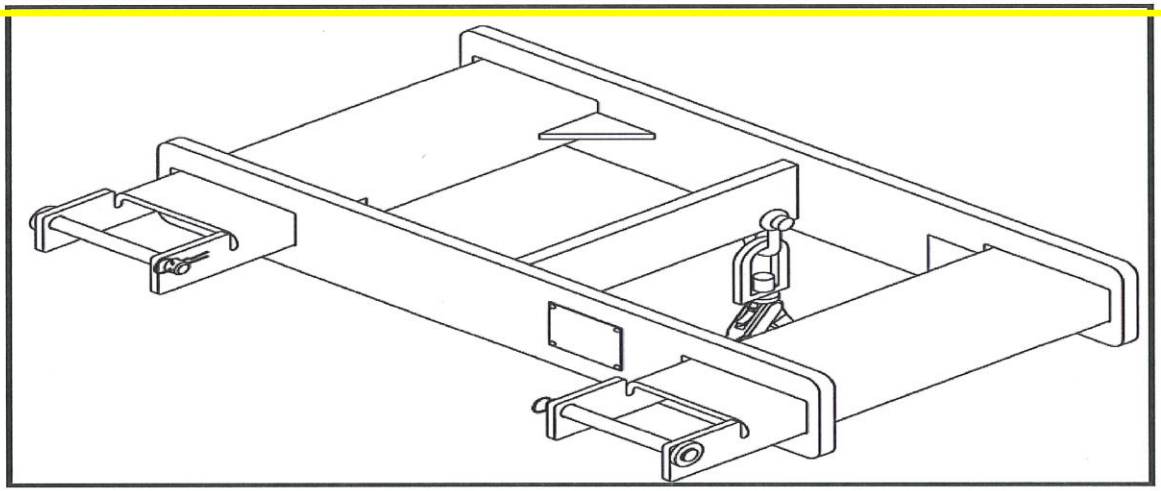

Figure #1

JLG authorizes the use of non-JLG fork mounted lifting hook attachments provided the following criteria are strictly adhered to:

- The manufacturer of the lifting hook attachment is responsible for:
  - Design,
  - Fabrication,
  - Workmanship,
  - Structural integrity,
  - Fit and function,
  - Overall quality
  - Clearly marking the rated capacity.
- The hook location on the lifting hook attachment must not exceed a horizontal distance of 24 inches from the heel of the fork when installed.

- The appropriate carriage capacity chart for the telehandler model must be used. Reference the appropriate Operation and Safety Manual for additional details. Weight of lifting hook attachment and rigging must be included as part of total load being lifted.
- Pallet/lumber forks of an appropriate load rating must be used. Do not use with cubing/block forks.
- To help protect against the attachment from being disengaged from the forks, pins must be provided on the lifting hook attachment that must be used to secure the lifting hook behind the heel of each fork. It cannot be secured by the use of chains, straps or clamps directly to the forks, fork carriage, load bar and/or the boom.
- Refer to the appropriate Operation and Safety Manual for the telehandler model the lifting hook will be used on. This literature provides information regarding appropriate methods for lifting suspended loads.
- Do not use a lifting hook attachment on 6 ft. masts or 8 ft. towers.
- Do not use a lifting hook attachment with carriages capable of rotating (i.e. side tilt and swing carriages) without disabling the rotation feature(s).
- All applicable safety procedures (country, local, employer, manufacturer, etc.) shall be strictly adhered to.
- Only trained and authorized operators shall be permitted to operate the referenced telehandler. Training includes, but not limited to, the reading and understanding of the Operators & Safety Manual.
- The operator must obtain any additional training in the proper operation of the lifting hook attachment that may be required. Please consult with your local, state, and employer regulations.

The current owner, operator, and user are responsible for the safe and proper utilization and selection of the non-JLG lifting hook attachment. JLG Industries assumes no responsibility or liability for any and all incidents involving personal injury, property damage, or equipment damage, which may occur from utilization of the non-JLG lifting hook attachment.

Should you have any questions, or require additional information, please advise.

Regards,
JLG INDUSTRIES, INC.
Product Safety and Reliability Department

JLG
JLG TELEHANDLERS

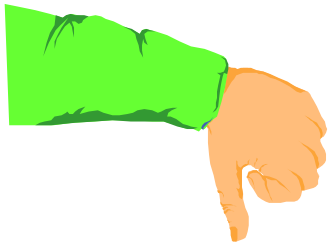

Manufacturers said they would not approve this Modification / Attachment

Standard Interpretations
10/22/1999 –

Forklifts: free rigging requires manufacturer approval.

- Free rigging is the direct attachment to or placement of rigging equipment (slings, shackles, rings, etc.) onto the tines of a powered industrial truck for a below-the-tines lift. This type of lift does not use an approved lifting attachment.
- Although free rigging is a common practice, it could affect the capacity and safe operation of a powered industrial truck. 29 CFR 1910.178(a)(4) requires that "Modifications and additions which affect the capacity and safe operation shall not be performed by the customer or user without manufacturers prior written approval. Capacity, operation, and maintenance instruction plates, tags, or decals shall be changed accordingly." In addition, 1910.178(o)(1) requires that "Only stable or safely arranged loads shall be handled. Caution shall be exercised when handling off-center loads which cannot be centered."
- Employers must seek written approval from powered industrial truck manufacturers when modifications and additions affect the capacity and safe operation of powered industrial trucks. However, if no response or a negative response is received from the manufacturer, OSHA will accept a written approval of the modification/addition from a Qualified Registered Professional Engineer. A Qualified Registered Professional Engineer must perform a safety analysis and address any safety and/or structural issues contained in the manufacturer's negative response prior to granting approval. Machine data plates must be changed accordingly. Of course, the use of an approved attachment to make lifts would be a viable alternative for an employer who does not seek written approval from a manufacturer or a Qualified Registered Professional Engineer.

- **Standard Fork Extensions**
  Handle large and odd shaped loads while increasing stability and minimizing damage with fork extensions. These will fit forks up to 2" thick. Widths are available in 4" 5" and 6". Fork lengths from 54" to 96". Consult your fork truck owners manual for capacity rating.

- <u>Booms</u>
- Converts a forklift truck into a mobile crane for handling unstable awkward loads. Available in many configurations such as, fork mounted (fixed and telescopic), carriage mounted (fixed and telescopic), hydraulic and rigging booms. All of our models are manufactured from structural tubing and are furnished with swivel safety hooks. Numerous capacities and lengths are available to suit most applications.

JUSTRITE
SAFETY CAN
585 LBS.
EMPTY WEIGHT
645966
STAR
INDUSTRIES
DANGER

STAR INDUSTRIES

4101 Garland Dr - Ft Worth, TX 76117
Ph: 817-485-6073
www.starindustries.com

MODEL 1360B HEAVY DUTY JIB

EXTENDS 7 TO 12 FT. **EMPTY WEIGHT** *585 lbs.*

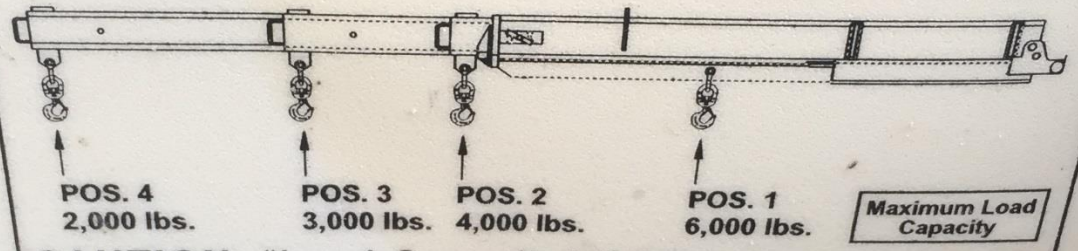

CAUTION: "Load Capacity" (LBS.) shown is for JIB only and does not reflect actual capacity of forklift

Standard Interpretations
07/03/2002 –
Powered industrial truck addition/modification approval and marking requirements.

- **Question:** Are sections (a)(4) and (5) stand alone sections? Should it be interpreted that **prior written approval is required from the manufacturer** to use front-end attachments as well as making any modifications and/or additions to a powered industrial truck.

  Reply: A front-end attachment would generally be an "addition" within the meaning of §1910.178(a)(4) that affects capacity and safe operation. Section §1910.178(a)(5) assumes that the truck with the attachments will already be, "marked to identify the attachments and show the approximate weight of the truck and attachment combination at maximum elevation with load laterally centered." Before a non-factory-installed attachment may be used, however, the user must comply both with (a)(4), by obtaining the truck manufacturer's written approval, and with (a)(5), by having the truck appropriately marked.

  Please be aware that OSHA would consider the lack of manufacturer's approval to be a ***de minimis*** violation if you had obtained written approval from a qualified Registered Professional Engineer after receiving no response or a negative response from the powered industrial truck manufacturer. If the manufacturer's response was negative then the engineer, prior to granting approval for the modification or addition, would need to perform a safety analysis and address all safety and/or structural issues contained in the manufacturer's disapproval. OSHA might not accept an engineer's written approval if it did not address all of the manufacturer's safety and structural issues.

RIG TO
THE CENTER OF GRAVITY

CENTER OF GRAVITY IS DIRECTLY BELOW THE LOAD HOOK

&

CONNECTION TO LOAD IS ABOVE CENTER OF GRAVITY

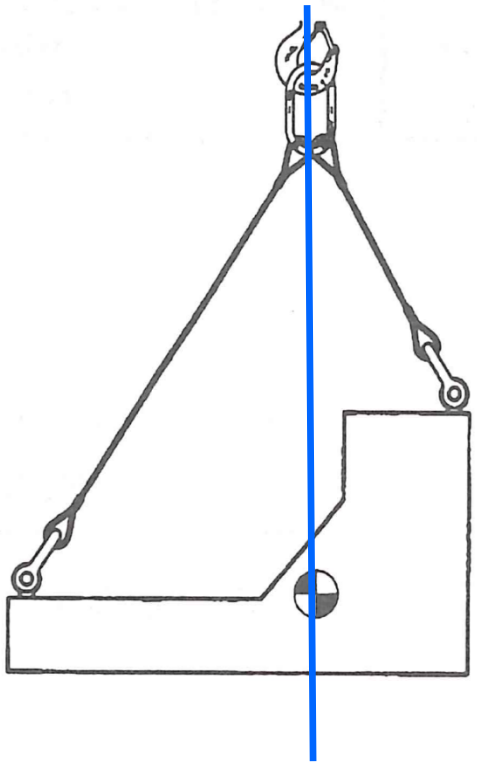

(POH684A)

LOAD STABILITY AND THE CENTER OF GRAVITY

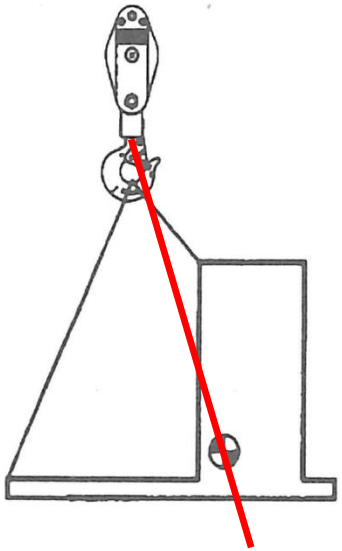

NOT RIGGED TO CENTER OF GRAVITY

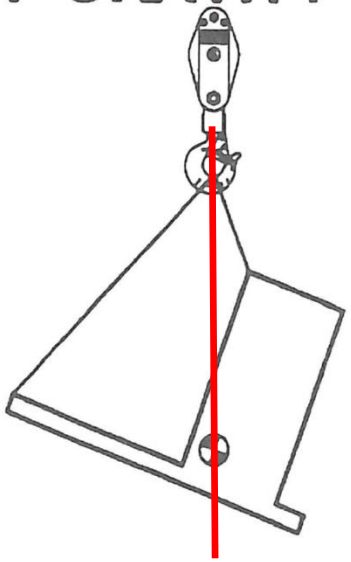

LOAD IS UNSTABLE AND WILL SHIFT - C.O.G. WILL MOVE TO DIRECTLY BELOW THE HOOK

(POH684B)

FINDING THE CENTER OF GRAVITY
TRIAL AND ERROR

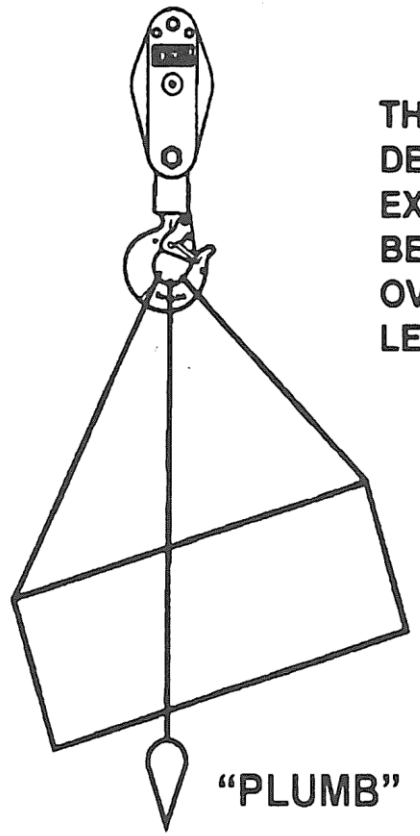

THIS IS THE LEAST
DESIRABLE METHOD
EXTREME CARE MUST
BE TAKEN NOT TO
OVERLOAD ANY
LEG OR FITTING

"PLUMB"

(POH590)

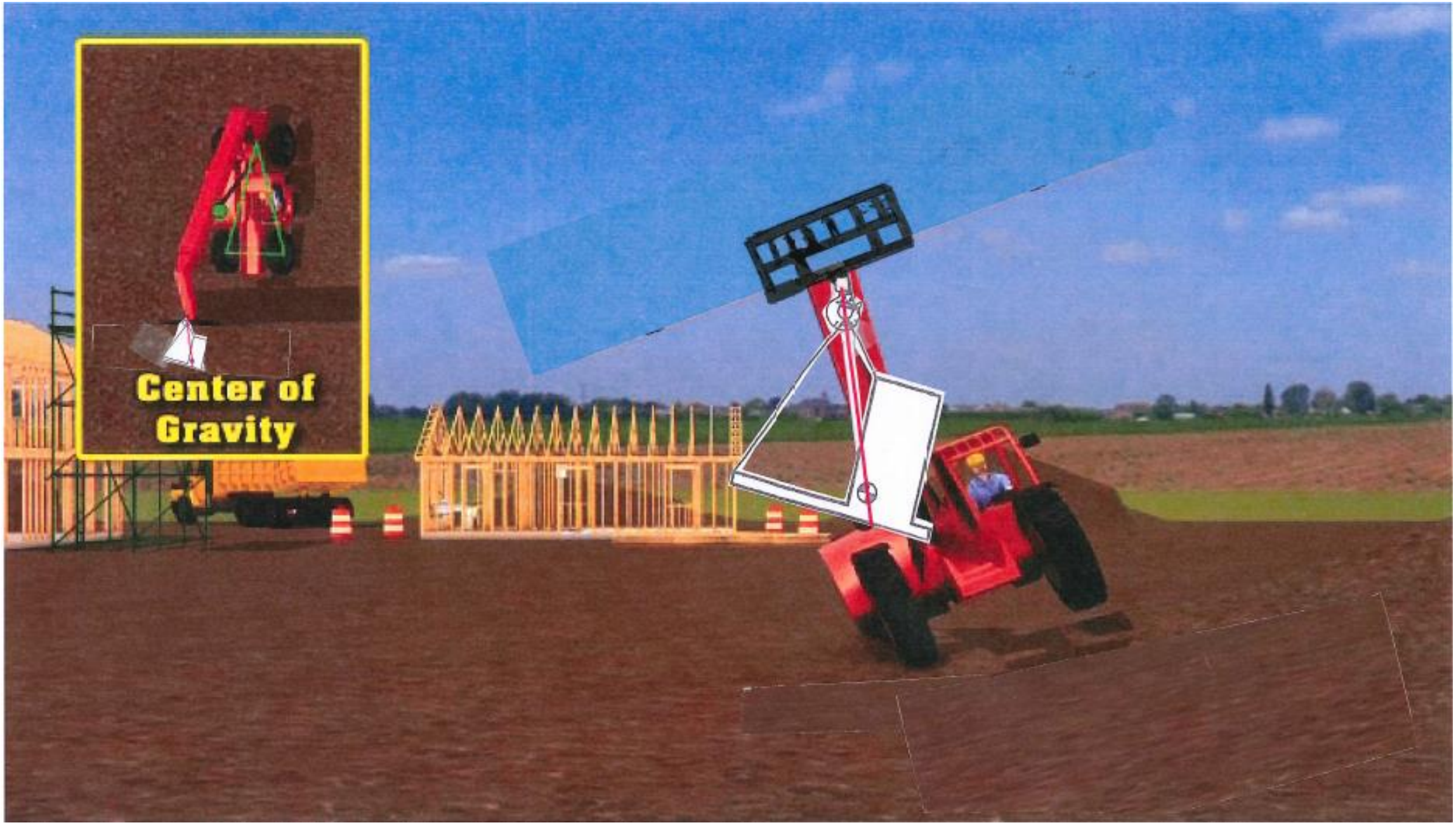
Center of
Gravity

Transporting a Suspended Load

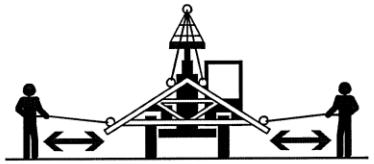
OZ3160

OW0130

- Travel in accordance with the requirements set forth in Section 1 - General Safety Practices and Section 5 - Attachments.
- For additional requirements, refer to the appropriate capacity chart in the operator cab.

Important things to remember:

- Ensure the boom and transfer carriage is fully retracted.
- Never raise the load more than 11.8 in (300 mm) above ground surface or the boom more than 45°.
- Combination of frame leveling and load could cause the telehandler to tip over.
- The guide persons and operator must remain in constant communication (verbal or hand) and be in visual contact with the operator at all times.
- Never place the guide persons between the suspended load and the telehandler.
- Only transport the load at walking speed, 0.9 mph (0.4 m/s), or less.

Leveling Procedure

1. Position machine in best location to lift or place load.
2. Apply parking brake and move transmission control lever to NEUTRAL.
3. Move boom so load is no more than 11.8 in (300 mm) above ground surface and boom/or boom is raised no more than 45°.
4. Observe level indicator to determine whether machine must be leveled prior to lifting load. Level machine with frame level joystick (see page 3-13) or outrigger joysticks (see page 3-12).

The telehandler is designed to permit leveling the main frame 10° to left or right to compensate for uneven ground conditions.